Oldcastle BuildingEnvelope®

SERIES 3000XT STOREFRONT

INSTALLATION AND GLAZING MANUAL

Phone: 1-866-OLDCASTLE (653-2278)
Web: www.obe.com

April 2021

TABLE OF CONTENTS

General Information.....Pages 3-4

Frame Fabrication and Cut List.....Page 5

Sill Receptor:
- Thermal Performance Recommendations.....Page 6
- Installation & Splicing.....Page 7

Outside Glazed System:
- Screw Spline Assembly.....Page 8
- Shear Block Assembly.....Page 9
- Glazing Guidelines.....Page 10
- Glazing Detail.....Page 11

Inside Glazed System:
- Screw Spline Assembly.....Page 12
- Shear Block Assembly.....Page 13
- Glazing Guidelines.....Page 14
- Glazing Detail.....Page 15

Mullion Fabrication using Drill Fixtures:
- Outside Glazed, Screw Spline or Shear Blocks.....Page 16
- Inside Glazed, Screw Spline or Shear Blocks.....Page 17

Frame Installation:
- Detail and Notes.....Page 18
- Anchorage and Perimeter Seal.....Page 19
- Glazing Adaptors.....Page 20
- Expansion Mullion.....Page 21
- Corners.....Page 22
- Entrance Framing.....Page 23

Parts List.....Pages 24-25

GENERAL INFORMATION

The Oldcastle BuildingEnvelope® Series 3000XT (2” x 4-1/2”) system represents the latest in product development technology complemented by installer on-the-job input and experience. Proper use of this system will assure optimum results in erection and long-term performance.

Oldcastle BuildingEnvelope® does not control the application nor selection of its product configurations, sealant, or glazing materials and assumes no responsibility thereof. It is the responsibility of the owner, architect and installer to make these selections are in strict compliance with applicable laws and building codes.

Over the years many components were added to our flush glaze systems. In addition, there are many ways to install storefront products. This manual represents recommendations for the best results.

PROTECTION AND STORAGE:

Handle the material carefully. Do not drop from the truck. Stack with adequate separation so that the material will not rub together. Store material off the ground. Protect against the elements and other construction hazards by using a well-ventilated covering. Remove material from package if it is wet or is located in a wet area.

CHECK MATERIAL:

Check all material upon arrival for quality and to assure against shipping damage. Any visible damage must be noted on the freight bill at the time of receipt. If a claim is required, then the receiving party must process a claim with the freight company.

Completely check construction, which will receive your materials against contract documents. Notify general contractor by letter of any discrepancies before proceeding with work. Failure to do so constitutes acceptance of work by other trades.

Check shop drawings and installation instructions to become familiar with the project. The shop drawings take precedence and include specific details for the project. The installation instructions are of a general nature and cover the most common conditions. Due to varying job conditions, all sealants used should be approved by the sealant manufacturer, to insure they will function for conditions shown on instructions and shop drawings. They must be compatible with all surfaces in which adhesion is required, including other sealant surfaces. Use primers where directed by manufacturer of sealant. Be sure to properly store sealants at recommended temperatures and check sealant for remainder of shelf life before using.

FIELD CONDITIONS:

- Do not install wall if there is a walkway with a down slope towards an entrance or a storefront.
- All materials to be installed plumb, level and true. Aluminum to be placed in direct contact with the masonry or incompatible materials should be isolated with a heavy coat of zinc-chromate or bituminous paint.
- After sealant is set and a representative amount of wall has been glazed (250 square feet of more), run a water hose to check installation. On large jobs, hose test should be repeated during glazing operation. Test should be conducted in accordance with AAMA 501.2 specifications.
- Coordinate protection of installed materials with general contractors and other trades.

CLEANING MATERIALS:

Cement, plaster, terrazzo, alkaline and acid based materials used to clean masonry are very harmful to finishes and should be removed with water and a mild soap immediately or permanent staining will occur. A spot test is recommended before any cleaning agent is used.

EXPANSION JOINTS:

Expansion joints and perimeter seals shown in these instructions and in the shop drawings are shown at normal size. Actual dimensions may vary due to perimeter conditions and/or differences in metal temperature between the time of fabrication and time of installation. For example, a 12 foot unrestrained length of aluminum extrusion can expand or contract 3/32 of an inch over a 50 degree Fahrenheit change. Any movement potential should be accounted for at time of the installation.

THERMAL IMPROVEMENT SUGGESTIONS:

To maintain or improve your wall installation, the following items should be considered:

1. Blinds or drapes prevent warm air from washing the window.
2. Warm air ventilators too far from window will not adequately wash the window with air to prevent condensation.
3. In extreme conditions, the fan of the heating systems should not cycle on and off, but run continuously.
4. Some heating systems have a water injection feature that can raise humidity levels. The higher the humidity levels the more likely condensation or frost will form. Raising the temperature and reducing humidity will usually solve this problem.
5. On rare occasions, an extremely cold storm may cause frost to appear on the glass or framing. A space heater and electric fan blowing along the plane of the window wall can reduce or eliminate this temporary condition.

FABRICATION SUGGESTIONS:

Oldcastle BuildingEnvelope® recommends the use of our EZ Punch tooling for faster and more accurate fabrication of wall systems. If hand fabricating the mullions; drill fixtures are available to improve accuracy. Fabrication instructions for use of these drill fixtures are described within this manual on page 11.

OUTSIDE GLAZED GLAZING GUIDELINES

Measure ROUGH OPENING to determine FRAME WIDTH and FRAME HEIGHT dimensions. Allow 1/2" minimum clearance at head and 1/4"minimum clearance at jambs and sill for shimming and caulking around perimeter frame.

Cut material to size per dimensions given below:

Frame Members	
Mullions and Mullion Fillers:	Frame Height (Rough Opening - Head & Sill Joints - 1/2")
Sill Receptor:	Frame Width + 1/4"
Horizontal, Head & Sill:	Day Light Opening (DLO)
Glass Stops:	DLO - 1/16"
Gaskets	
Horizontal Gaskets:	DLO + 1/4" per foot
Vertical Gaskets:	DLO + 1" + 1/4" per foot
Accessories	
Horizontal Glazing Adaptors:	DLO - 1/16"
Vertical Glazing Adaptors:	DLO + 7/8"
Door Jambs:	Rough Opening - Head Joint

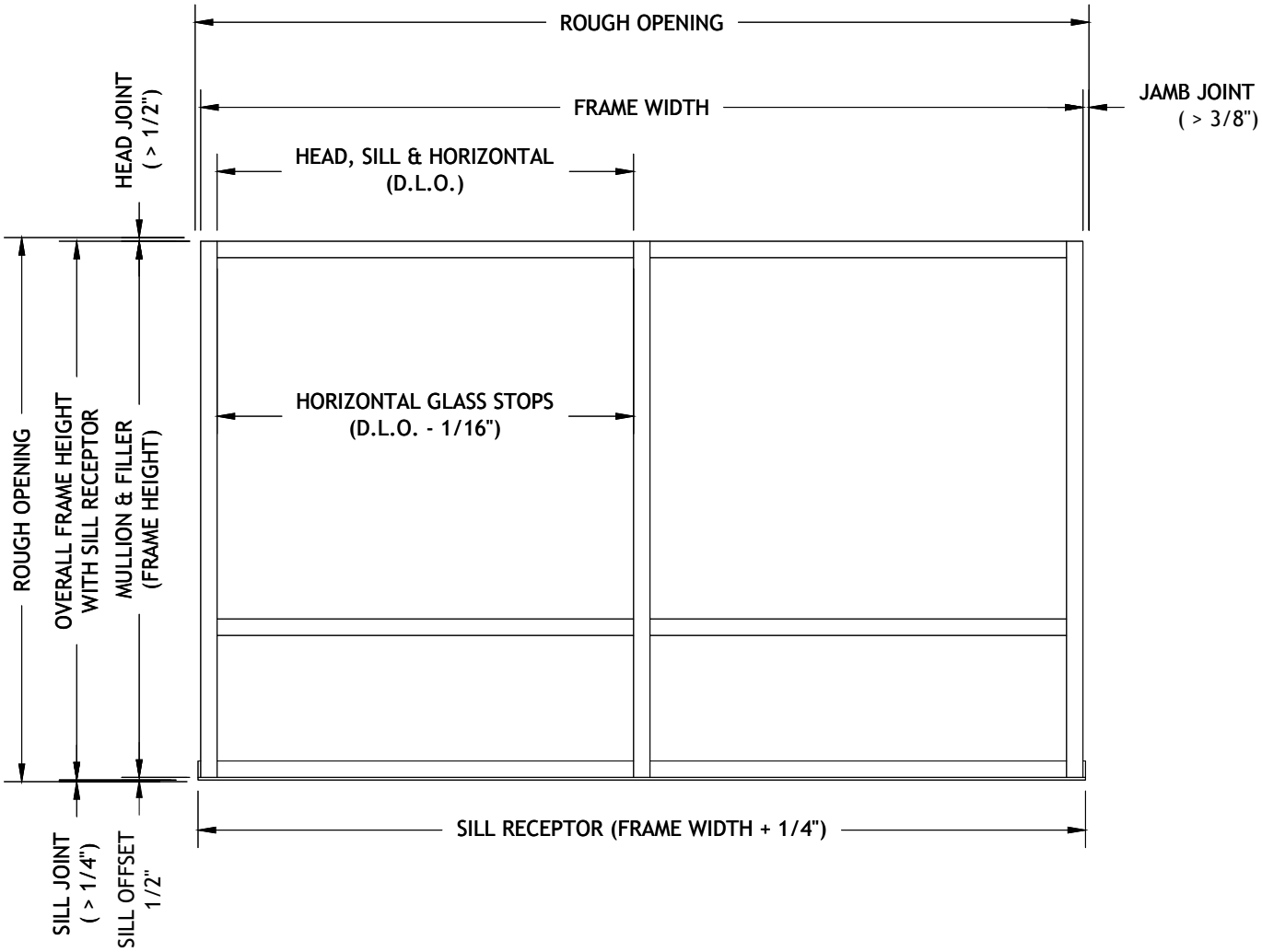

INSTALLATION FOR THERMAL PERFORMANCE

NOT RECOMMENDED

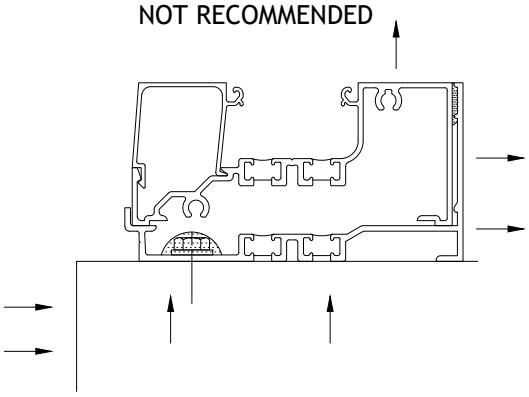

PREFERRED

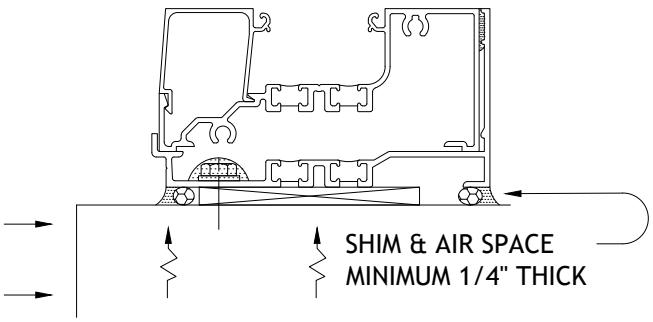

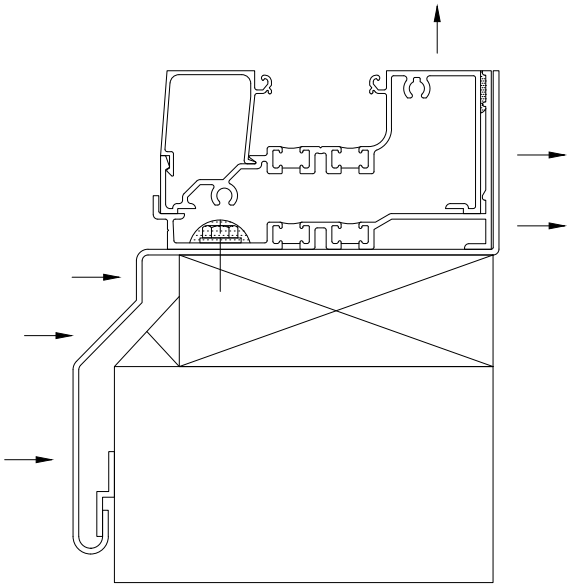

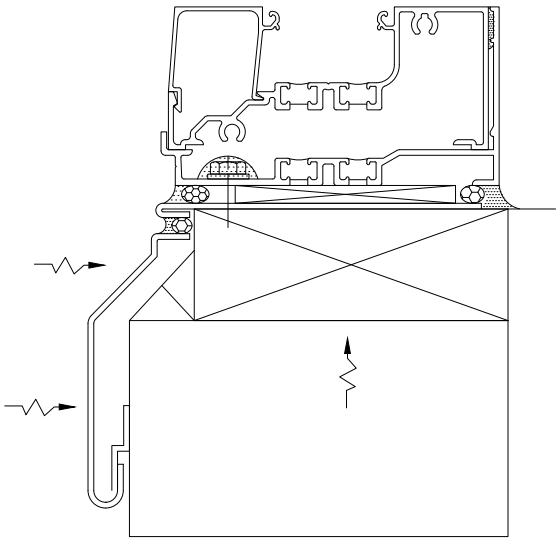

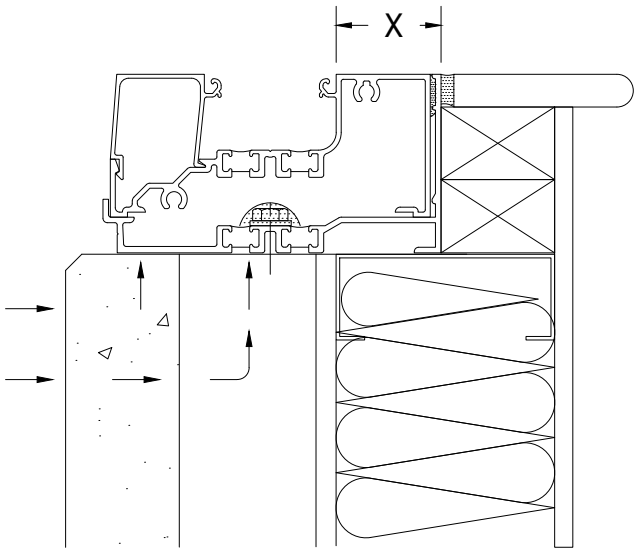

NOT ENOUGH METAL SHOWING AT "X"

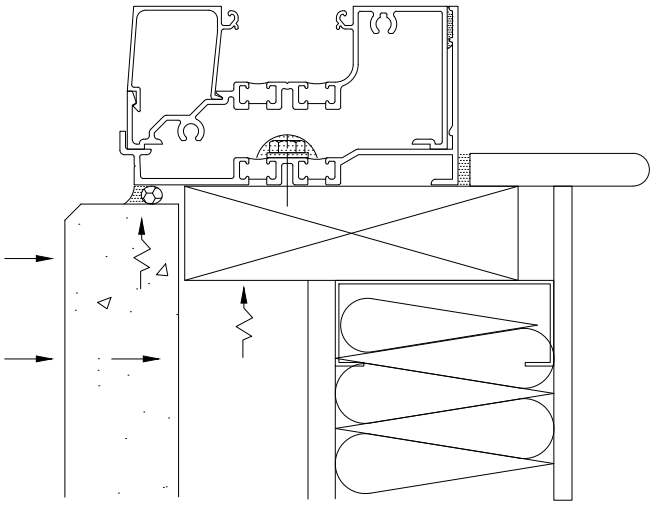

TO DERIVE THE GREATEST BENEFIT FROM YOUR STOREFRONT INSTALLATION,
WE RECOMMEND YOU REVIEW THE DETAILS ABOVE.

SILL RECEPTOR INSTALLATION

INSTALL SILL RECEPTOR AND END DAM

NOTE: IF A TWO PIECE HEAD RECEPTOR IS NOT USED, A 1/4" MINIMUM CLEARANCE IS REQUIRED AT THE HEAD CONDITION TO ALLOW FRAME INSTALLATION.

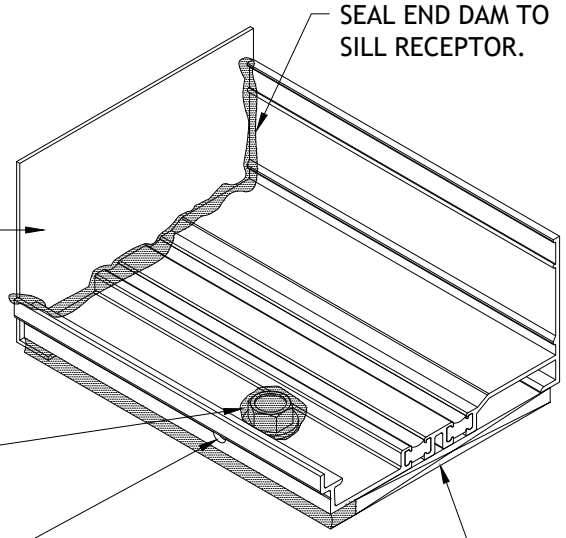

INSTALL SPLICE SHEET

NOTE: INSTALL SILL RECEPTOR LEVEL.

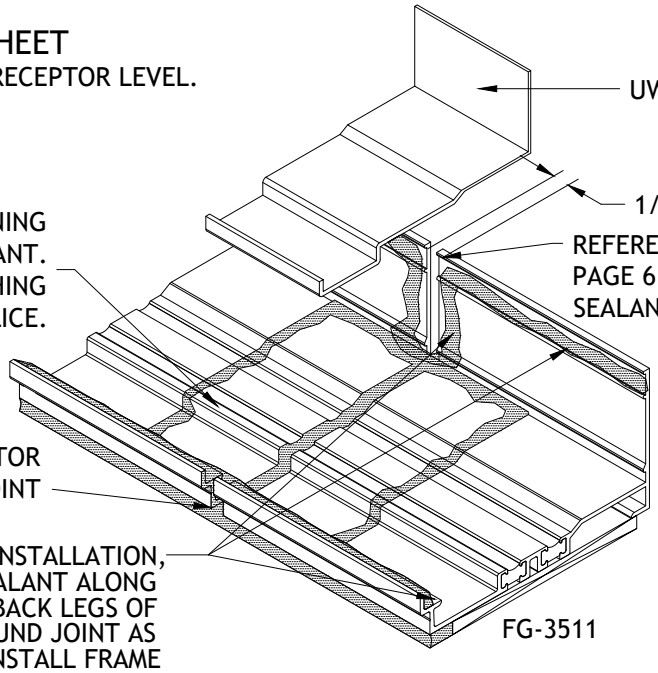

NOTE:
1) SILL RECEPTOR SHALL BE INSTALLED LEVEL AND SHOULD NEVER TILT TOWARDS INTERIOR OF BUILDING.
2) THE FG-3511 SILL RECEPTOR IS DESIGNED TO WITHSTAND A MAXIMUM END REACTION OF 600 LBS.
3) SPLICE SILL RECEPTOR AT MID-LITE.
4) LOCATE SPLICE JOINT AT DISTANCE OF NO MORE THAN EVERY 12 FEET.

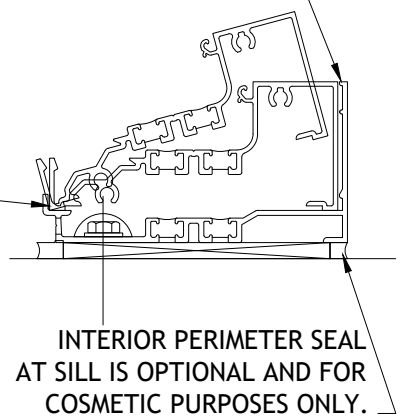

OUTSIDE GLAZED, SCREW SPLINE FRAME ASSEMBLY

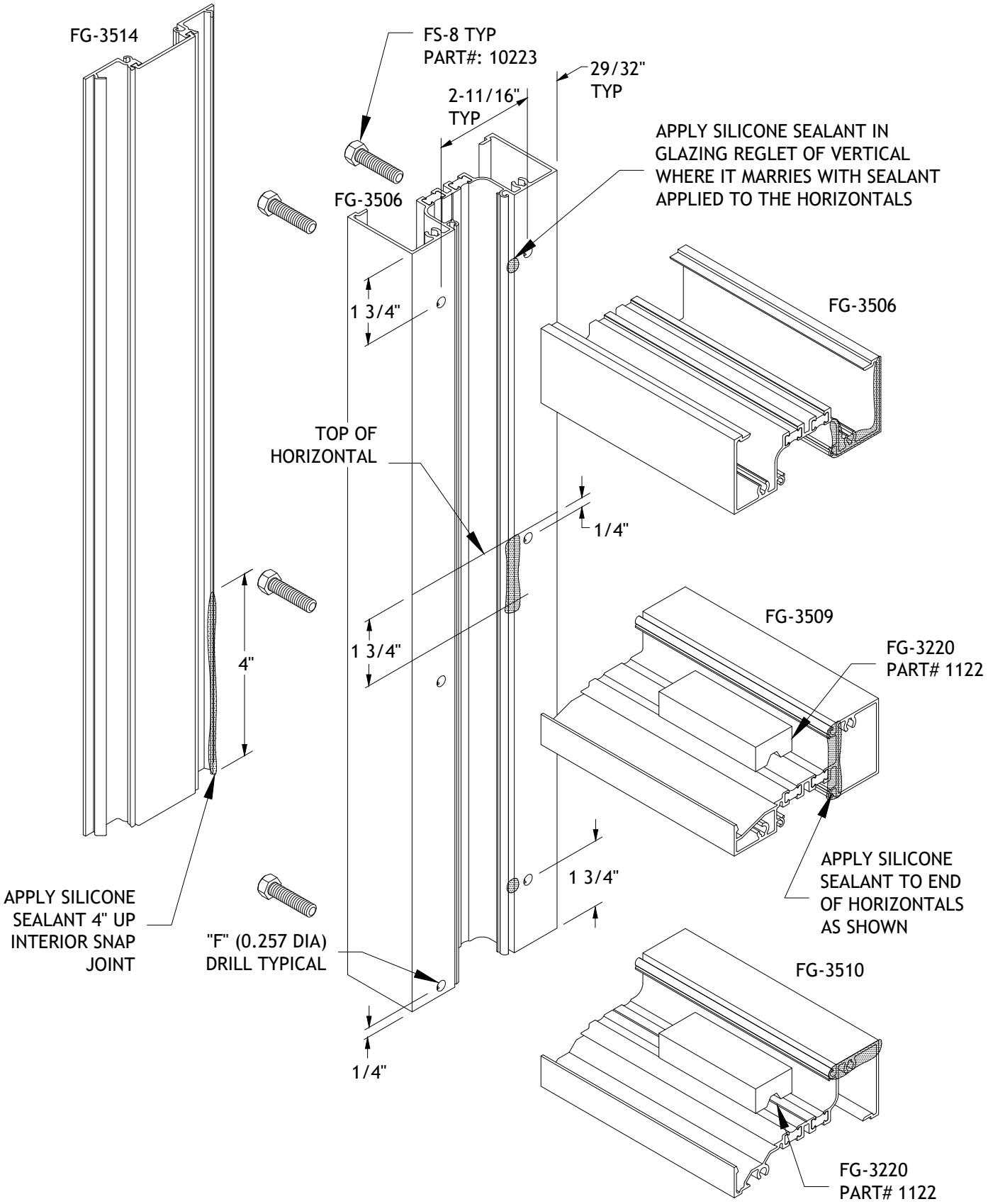

REFERENCE PAGE 16 FOR USE OF DJ-8 DRILL FIXTURE.

OUTSIDE GLAZED, SHEAR BLOCK FRAME ASSEMBLY

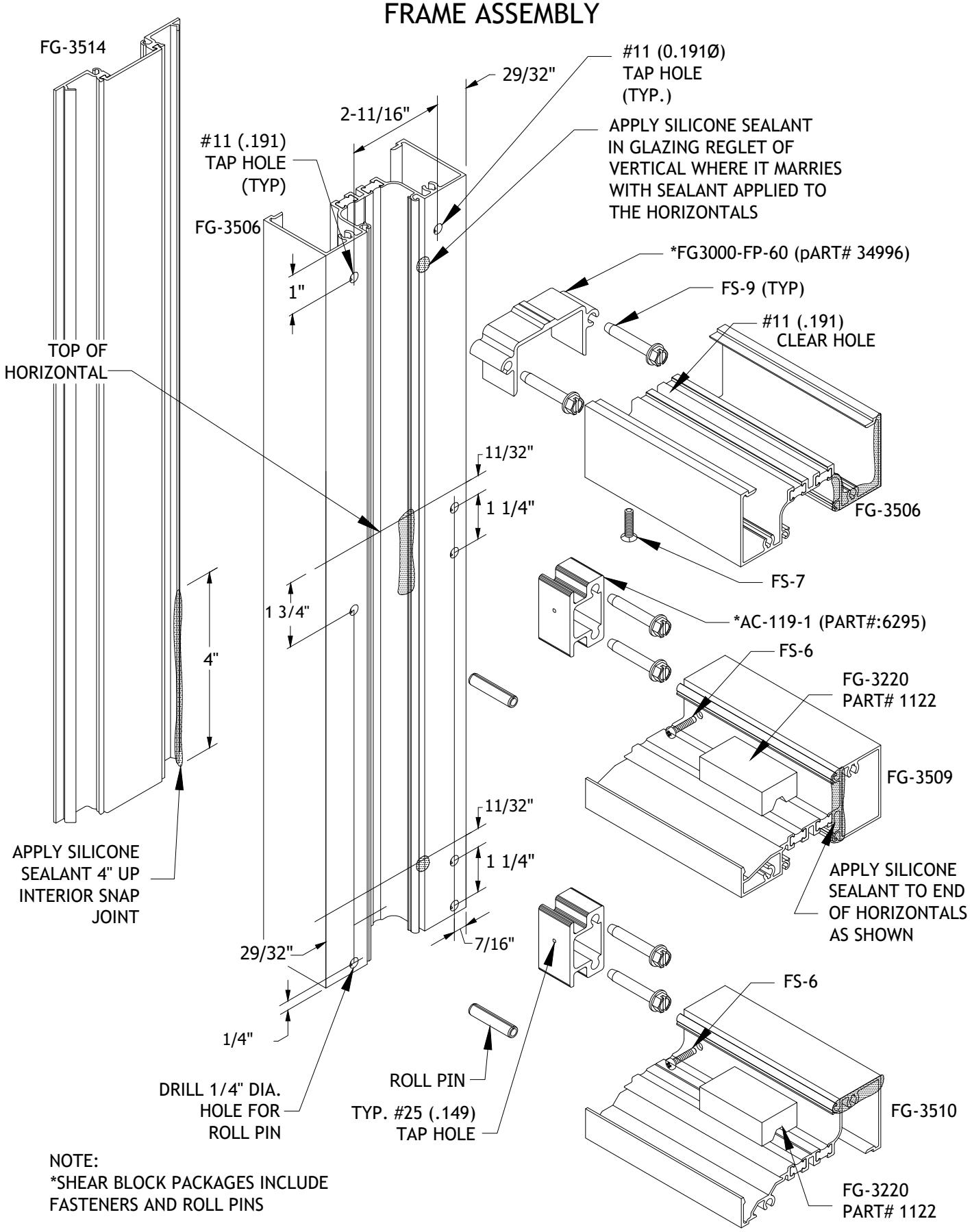

NOTE:
*SHEAR BLOCK PACKAGES INCLUDE FASTENERS AND ROLL PINS

REFERENCE PAGE 16 FOR USE OF DJ-8 DRILL FIXTURE.

OUTSIDE GLAZED GLAZING GUIDELINES

1) REMOVE GASKETS FROM ROLL AND ALLOW TO RELAX OVERNIGHT.
   ALL GASKETS TO BE CUT D.L.O. + 1/4" PER FOOT.

2) VERTICAL GASKETS RUN THRU, HORIZONTAL GASKETS SHOULD BE
   MITERED ON ENDS AS SHOWN IN DETAIL "A"

3) INSTALL INTERIOR GASKETS PRIOR TO GLAZING. CORNERS OF INTERIOR GASKETS TO BE
   SET IN SEALANT (DTL."B") AND CORNERS SEALED JUST PRIOR TO SETTING GLASS (DTL."A").
   NOTE: CLEAN GASKETS AND SURFACES WITH ISOPOPYL ALCOHOL PRIOR TO
   SEALING CORNERS.

4) LOCATE SETTING BLOCKS AT EITHER 1/4 POINTS OR 1/8 POINTS, DEPENDENT ON
   SIZE OF GLASS.

5) GLASS IS CUT DAYLIGHT OPENING PLUS 7/8".

6) GLAZE OPENINGS FROM BOTTOM TO TOP. INSTALLING WATER DIVERTERS IN HORIZONTAL
   ABOVE, AFTER LITE BELOW IS IN POSITION.

7) WATER DIVERTERS (FG1000-FP-2) MUST BE LOCATED ON EACH END OF HORIZONTALS
   AND SET IN SEALANT.

8) WHEN INSTALLING GLASS: FIRST, WET TOP OF SETTING BLOCK WITH SOAPY WATER.
   ONCE GLASS IS SET IN PLACE, PUSH GLASS AGAINST INTERIOR GASKET AT SETTING BLOCK
   AREA. FAILURE TO DO SO MAY CAUSE DIAGONAL CRACKS TOWARDS SETTING BLOCKS DUE
   TO GLASS BENDING WHILE INSTALLING GASKET(S) IN CORNERS.

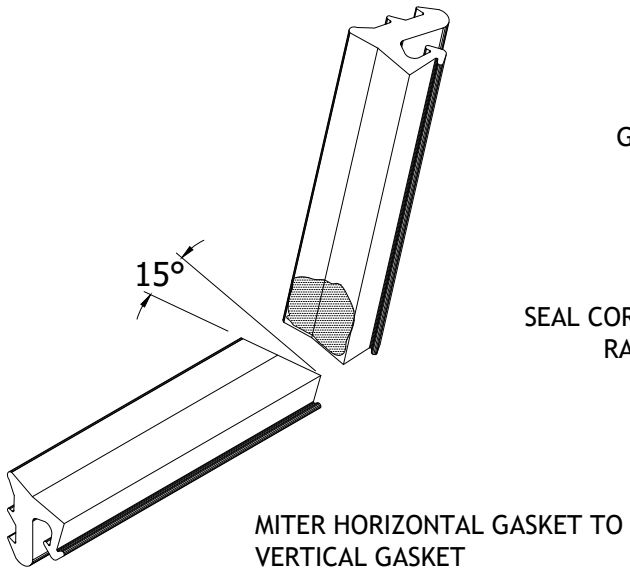

DETAIL "A"

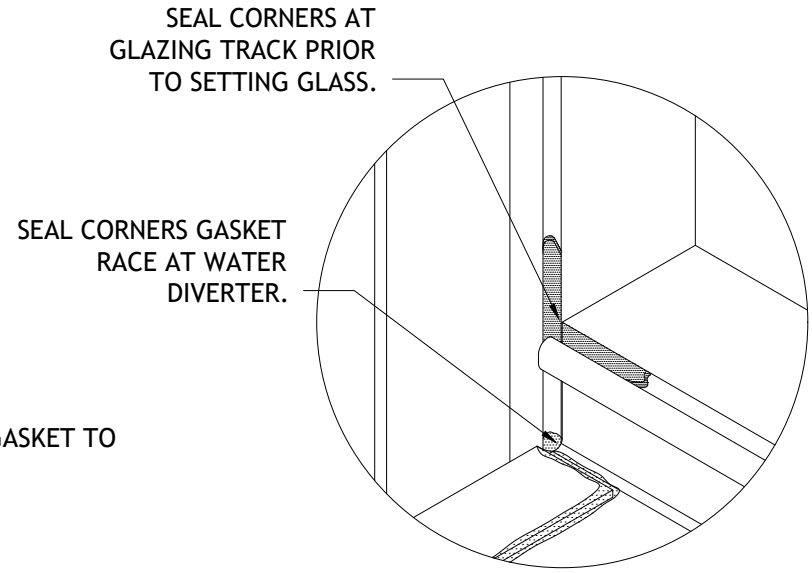

DETAIL "B"

OUTSIDE GLAZED GLAZING DETAIL

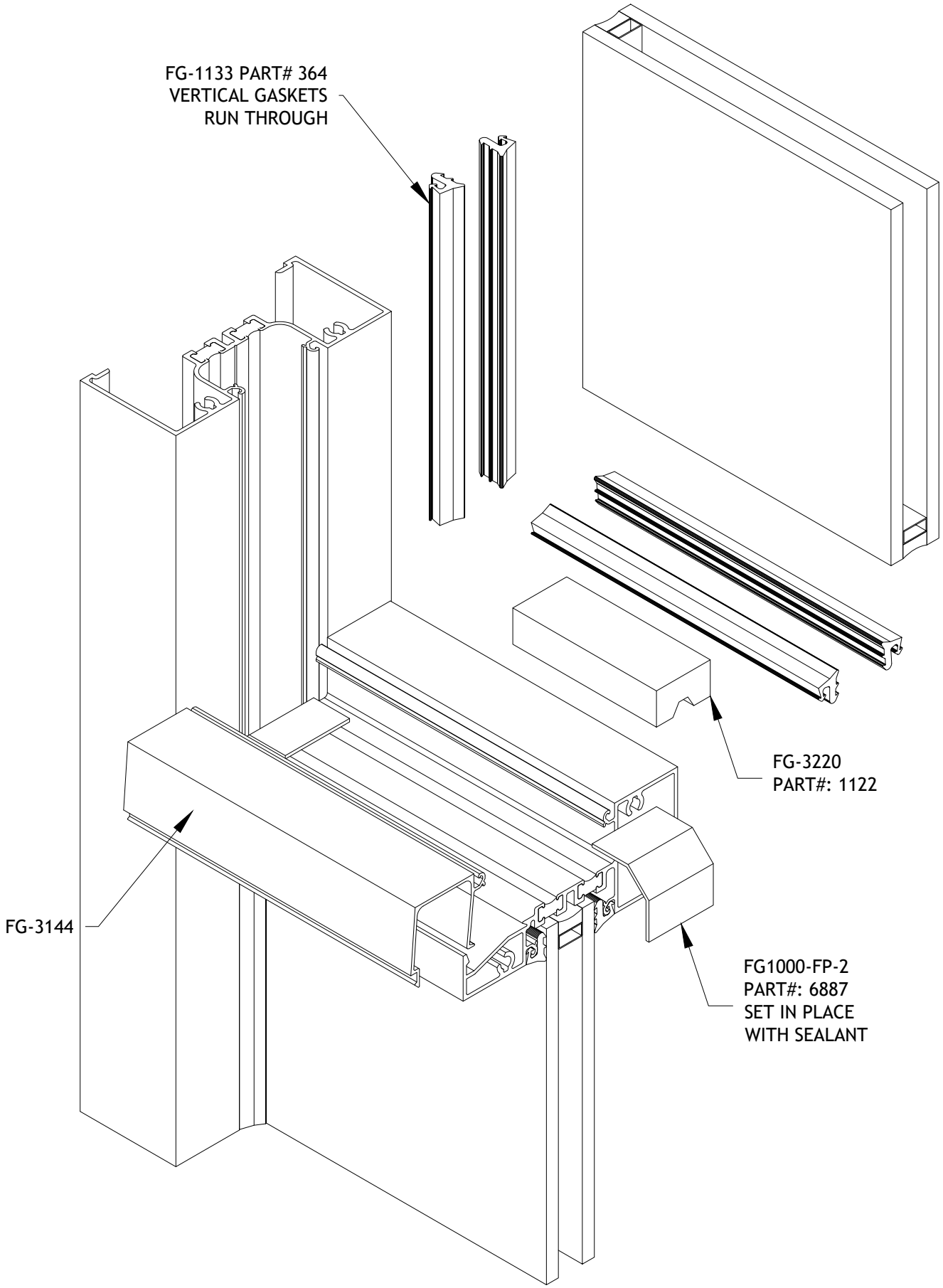

INSIDE GLAZED, SCREW SPLINE FRAME ASSEMBLY

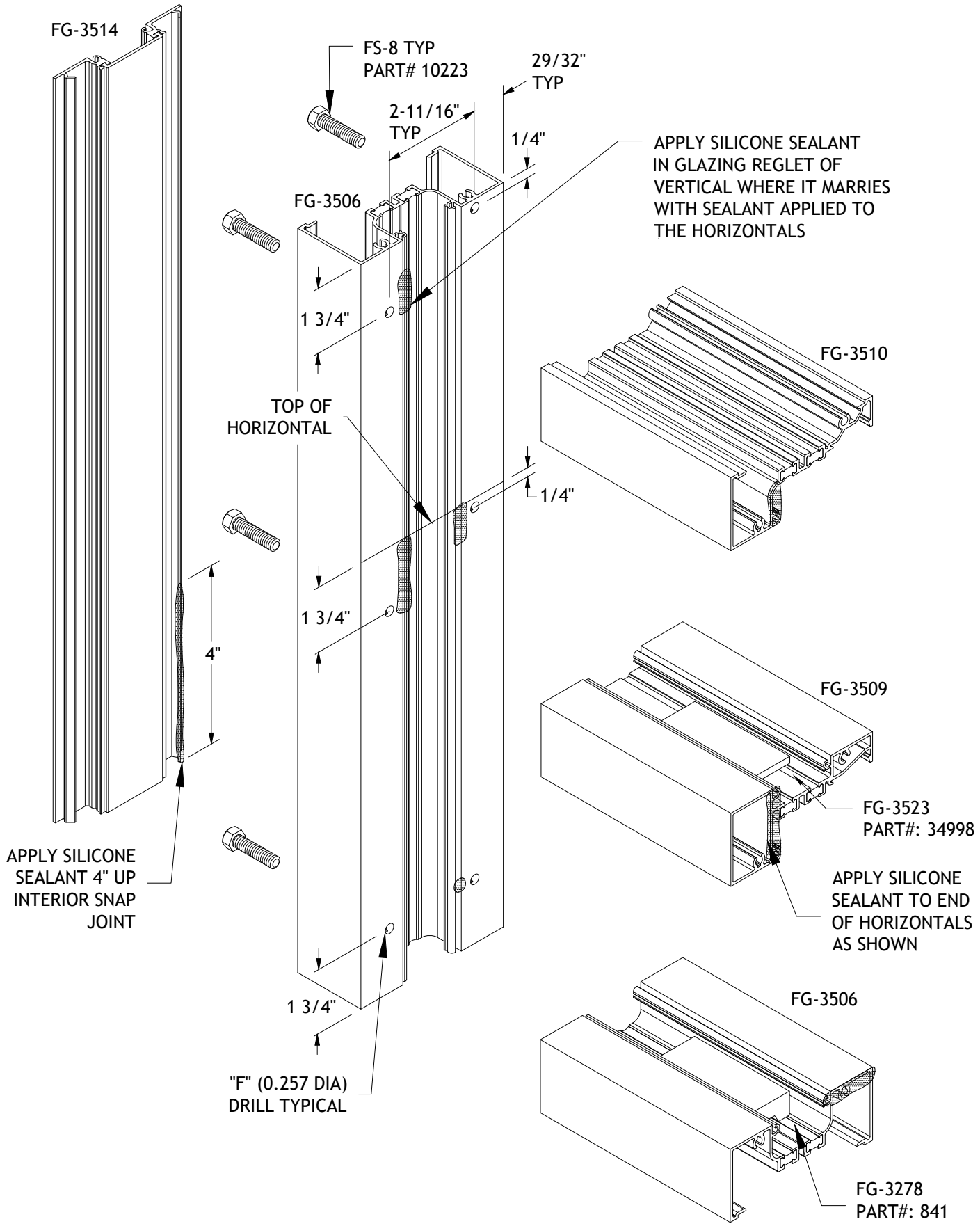

REFERENCE PAGE 17 FOR USE OF DJ-8 DRILL FIXTURE.

INSIDE GLAZED, SHEAR BLOCK FRAME ASSEMBLY

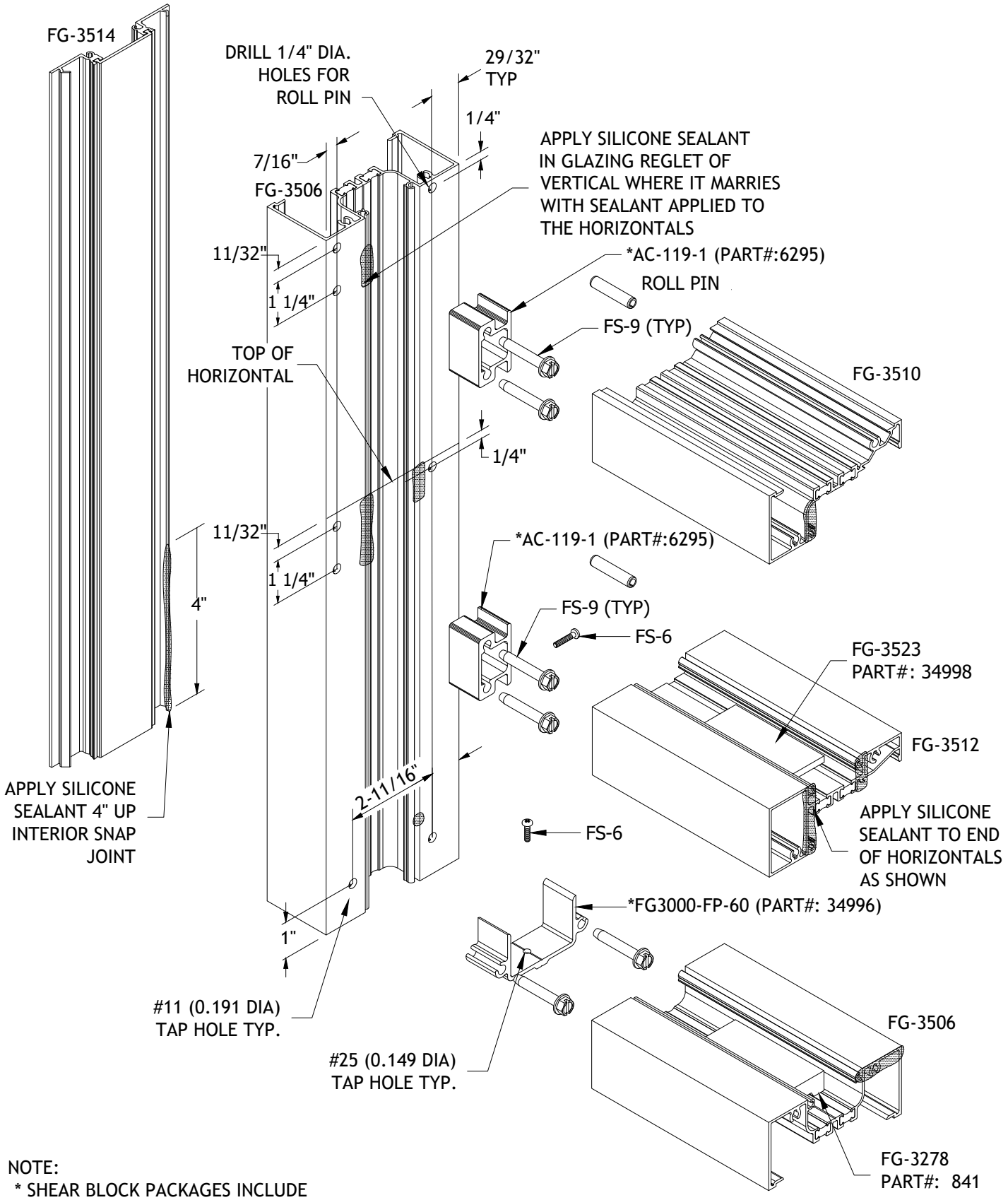

NOTE:
* SHEAR BLOCK PACKAGES INCLUDE FASTENERS AND ROLL PINS

REFERENCE PAGE 17 FOR USE OF DJ-8 DRILL FIXTURE.

INSIDE GLAZED GLAZING GUIDELINES

1) REMOVE GASKETS FROM ROLL AND ALLOW TO RELAX OVERNIGHT.
   ALL GASKETS TO BE CUT D.L.O. + 1/4" PER FOOT.

2) VERTICAL GASKETS RUN THRU, HORIZONTAL GASKETS SHOULD BE
   MITERED ON ENDS AS SHOWN IN DETAIL "A"

3) INSTALL EXTERIOR GASKETS PRIOR TO GLAZING. CORNERS OF EXTERIOR GASKETS
   TO BE SET IN SEALANT (DTL."B") AND CORNERS SEALED JUST PRIOR TO SETTING
   GLASS (DTL."A").
   NOTE: CLEAN GASKETS AND SURFACES WITH ISOPOPYL ALCOHOL PRIOR TO
   SEALING CORNERS.

4) LOCATE SETTING BLOCKS AT EITHER 1/4 POINTS OR 1/8 POINTS, DEPENDENT ON
   SIZE OF GLASS.

5) GLASS IS CUT DAYLIGHT OPENING PLUS 7/8".

6) GLAZE OPENINGS FROM BOTTOM TO TOP. INSTALLING WATER DIVERTERS IN
   HORIZONTAL ABOVE, AFTER LITE BELOW IS IN POSITION.

7) WATER DIVERTERS (FG1000-FP-4&5) MUST BE LOCATED ON EACH END OF HORIZONTALS
   AND SET IN SEALANT.

8) WHEN INSTALLING GLASS: FIRST, WET TOP OF SETTING BLOCK WITH SOAPY WATER.
   ONCE GLASS IS SET IN PLACE, PUSH GLASS AGAINST GASKET AT SETTING BLOCK AREA.
   FAILURE TO DO SO MAY CAUSE DIAGONAL CRACKS TOWARDS SETTING BLOCKS DUE TO
   GLASS BENDING WHILE INSTALLING GASKET(S) IN CORNERS.

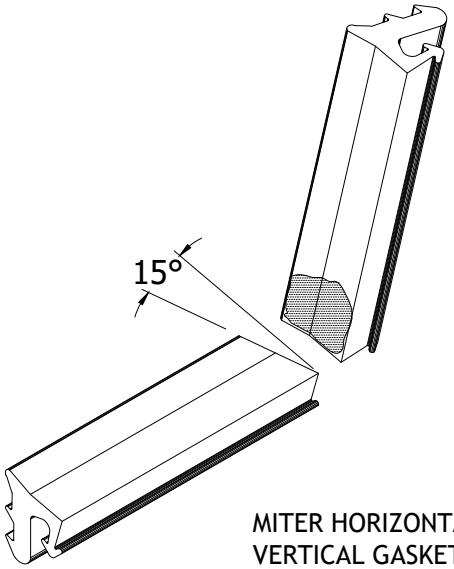

MITER HORIZONTAL GASKET TO
VERTICAL GASKET

DETAIL "A"

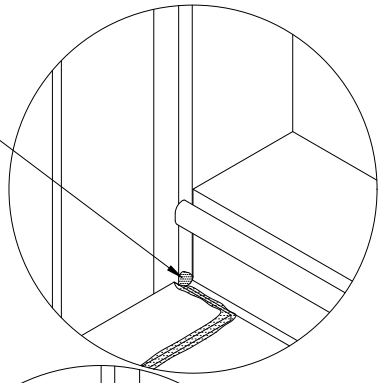

SEAL CORNERS GASKET
RACE AT WATER
DIVERTER.

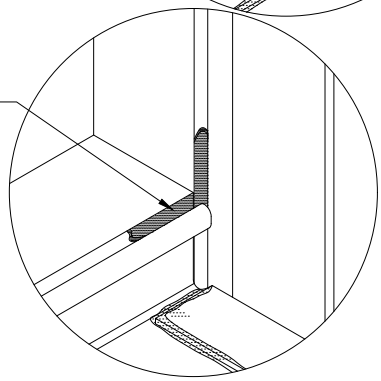

SEAL CORNERS AT
GLAZING TRACK PRIOR
TO SETTING GLASS.

DETAIL "B"

INSIDE GLAZED GLAZING DETAIL

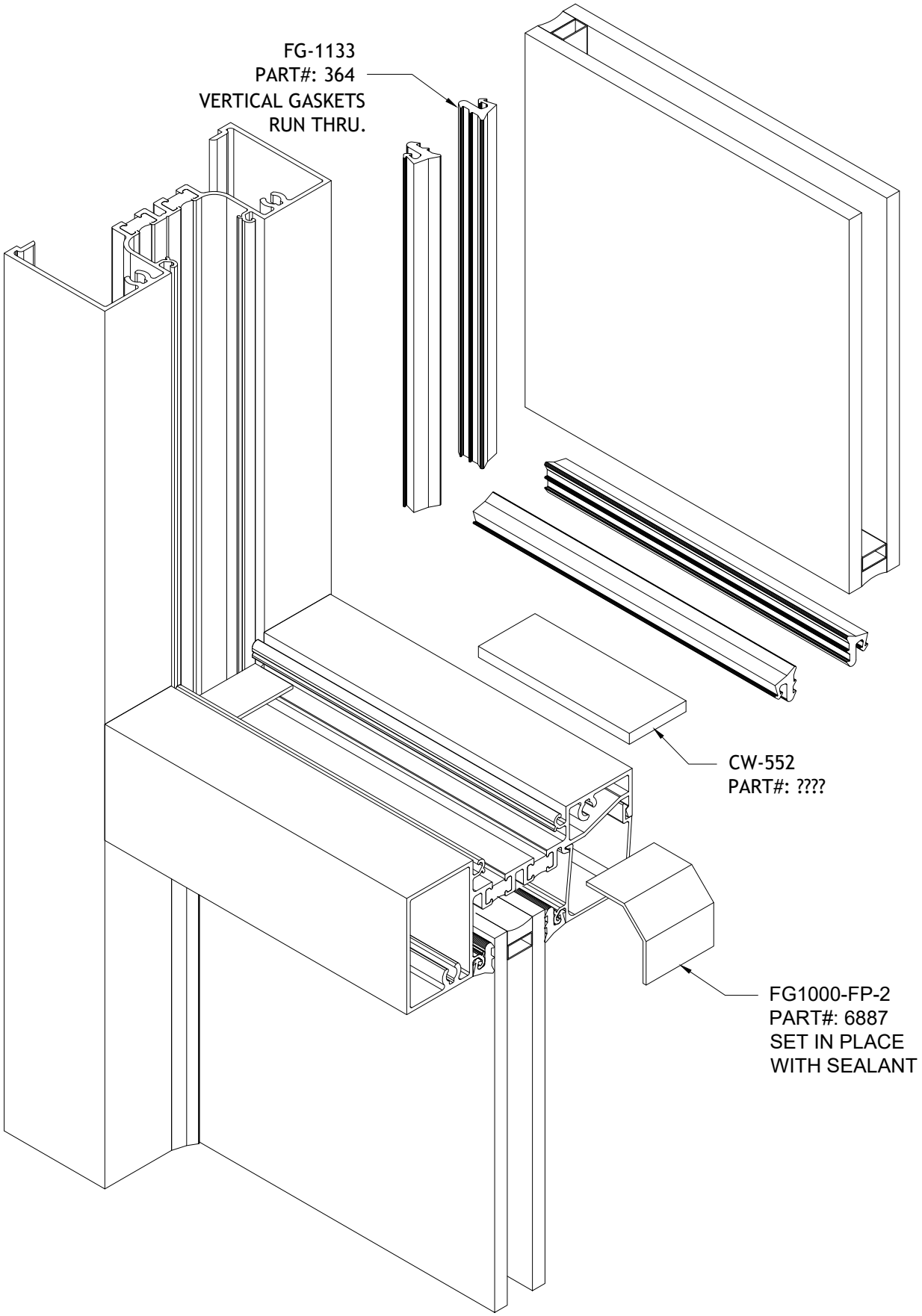

OUTSIDE GLAZED FABRICATION USING DRILL FIXTURE

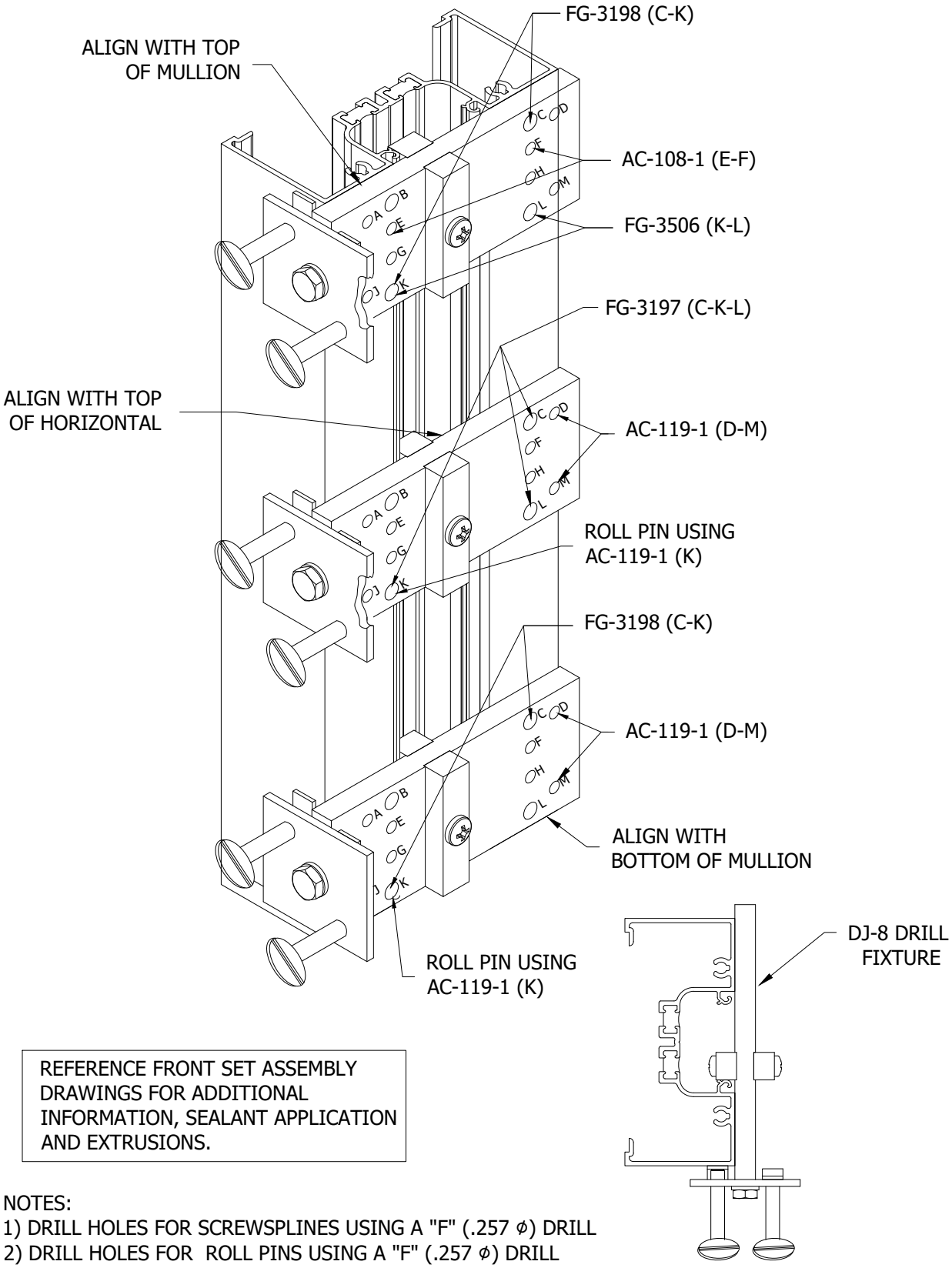

REFERENCE FRONT SET ASSEMBLY DRAWINGS FOR ADDITIONAL INFORMATION, SEALANT APPLICATION AND EXTRUSIONS.

NOTES:
1) DRILL HOLES FOR SCREWSPLINES USING A "F" (.257 ϕ) DRILL
2) DRILL HOLES FOR ROLL PINS USING A "F" (.257 ϕ) DRILL
3) DRILL HOLES FOR SHEAR BLOCKS USING #11 (.191ϕ) DRILL

INSIDE GLAZED FABRICATION USING DRILL FIXTURE

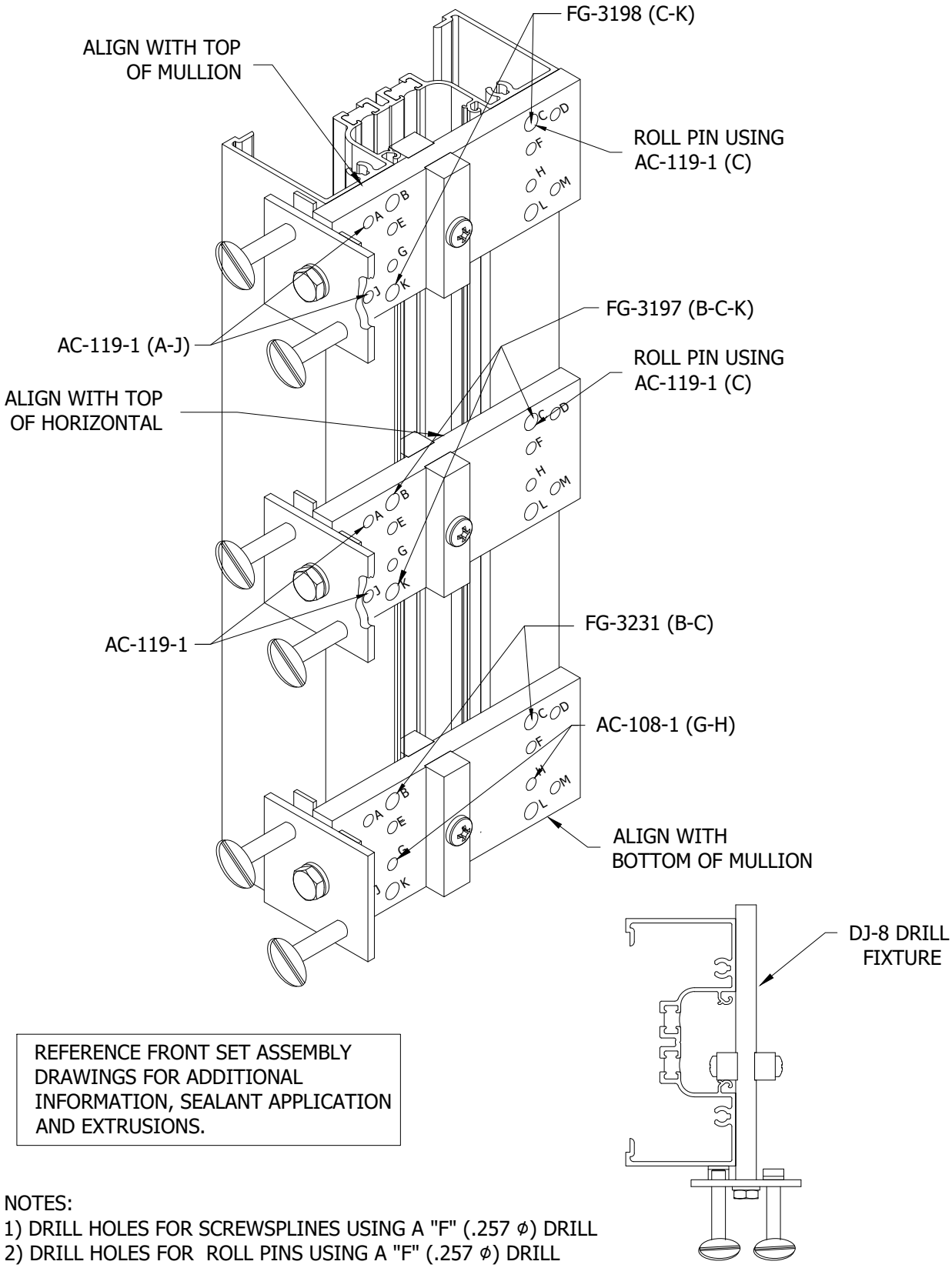

REFERENCE FRONT SET ASSEMBLY DRAWINGS FOR ADDITIONAL INFORMATION, SEALANT APPLICATION AND EXTRUSIONS.

NOTES:
1) DRILL HOLES FOR SCREWSPLINES USING A "F" (.257 ϕ) DRILL
2) DRILL HOLES FOR ROLL PINS USING A "F" (.257 ϕ) DRILL
3) DRILL HOLES FOR SHEAR BLOCKS USING #11 (.191ϕ) DRILL

FRAME INSTALLATION

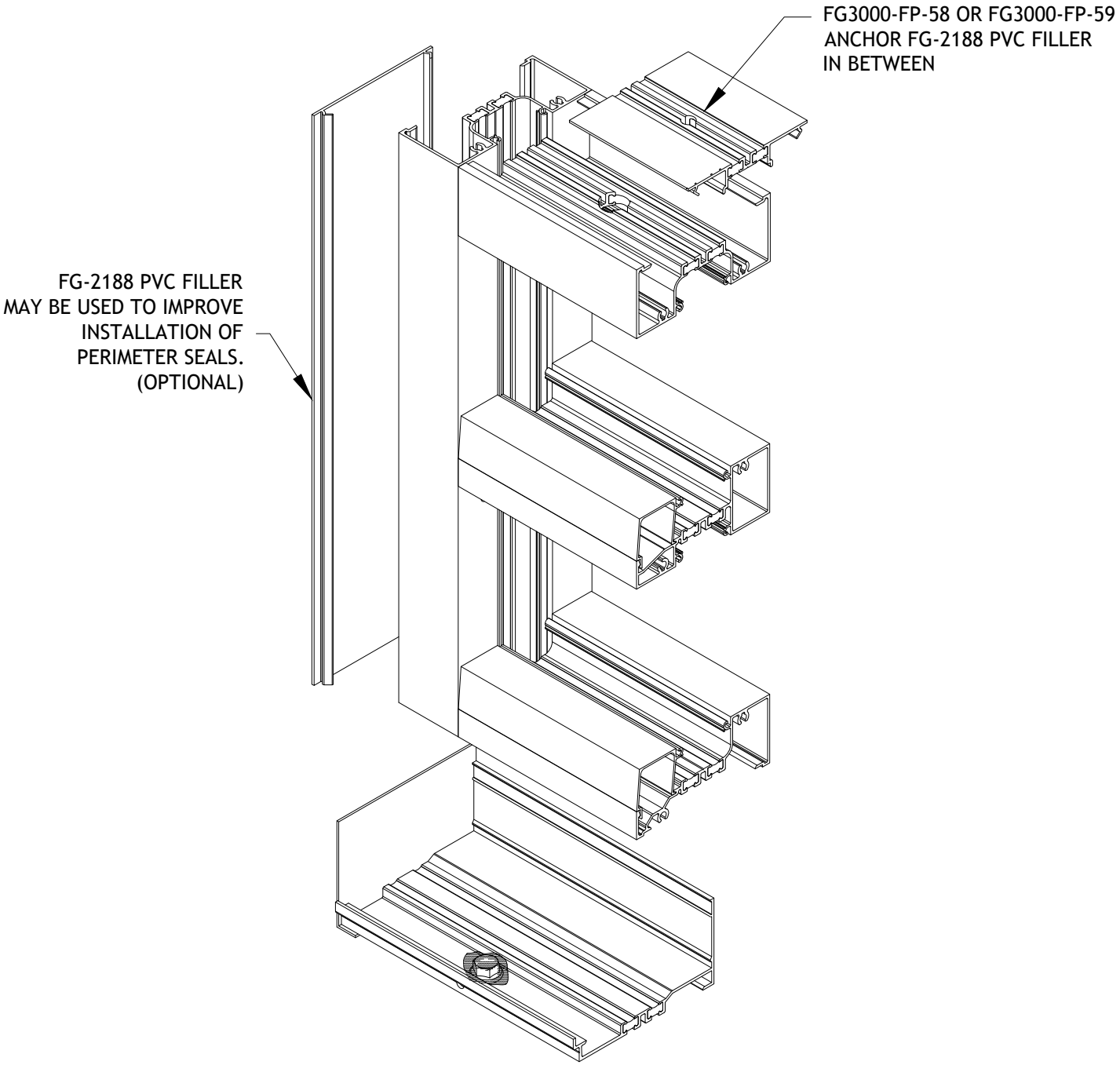

NOTES:

1) WHEN USING OPTIONAL FG-3511 SILL RECEPTOR, SILL ANCHORS ARE NOT REQUIRED.

2) MAXIMUM END REACTION AT MULLION WHEN USING FG-3511 SILL RECEPTOR IS 600 LBS.

3) HEAD ANCHORS SHOULD BE LOCATED SO THAT THE ANCHOR IS NOT MORE THAN 4" AWAY FROM EACH SIDE OF MULLION.

4) ASSEMBLY WITHOUT FLASHING IS NOT RECOMMENDED.

5) ASSEMBLY USING A NON-THERMAL OR SHEET METAL FLASHING WILL RESULT IN LOSS OF THERMAL CONTINUITY AND IS NOT RECOMMENDED.

ANCHORAGE AND PERIMETER SEAL

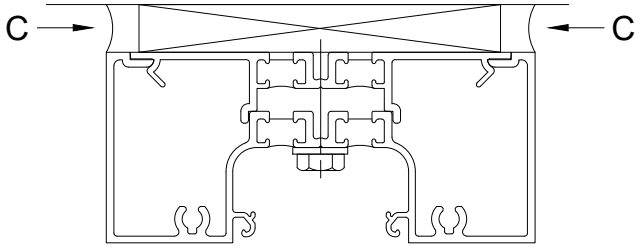

FG-3506 HEAD WITH FG3000-FP-58 ANCHOR

FG3000-FP-58 AND FG3000-FP-59 ANCHORS ARE DESIGNED TO CARRY A MAXIMUM END REACTION OF 600LBS.

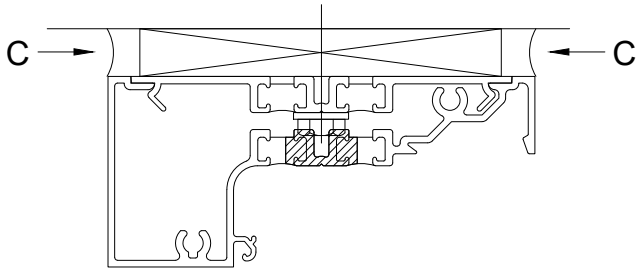

FG-3510 HEAD WITH FG3000-FP-59 ANCHOR

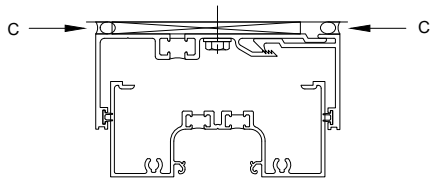

OPTIONAL MO-678/MO-244 HEAD RECEPTOR MAXIMUM END REACTION OF 450 LBS.

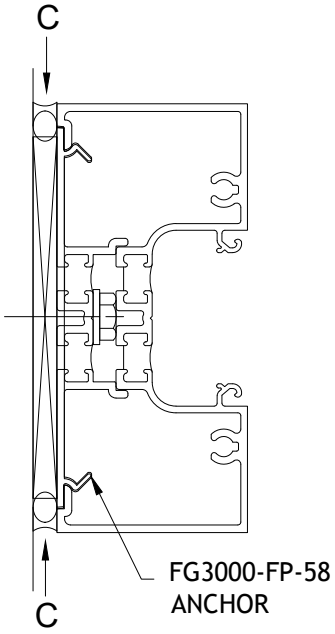

APPLY SEALANT ALONG LENGTH OF SILL FLASHING AT POINT (A).

APPLY FILLET SEAL BETWEEN SILL FLASHING AND FRONT OF SILL (B).

THE QUALITY OF THE INSIDE AND OUTSIDE PERIMETER SEALS (C) MAY BE IMPROVED BY USING FG-2188 RIGID PVC FILLER. THE PART MAY BE USED IN FULL LENGTHS OR CUT INTO PIECES. ITS PURPOSE IS TO PROVIDE SUPPORT FOR THE BACKER ROD REGARDLESS OF JOINT SIZE. INTERIOR PERIMETER SEAL AT SILL (D) IS OPTIONAL AND FOR COSMETIC PURPOSES ONLY.

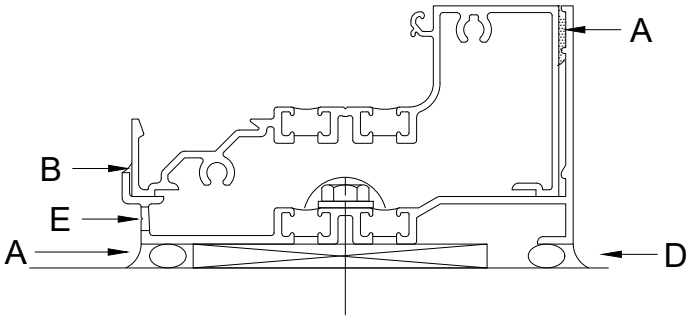

NOTE: 1/4" WEEP HOLES REQUIRED IN FLASHING (E) AT CENTERLINE OF D.L.O.

GLAZING ADAPTOR INSTALLATION

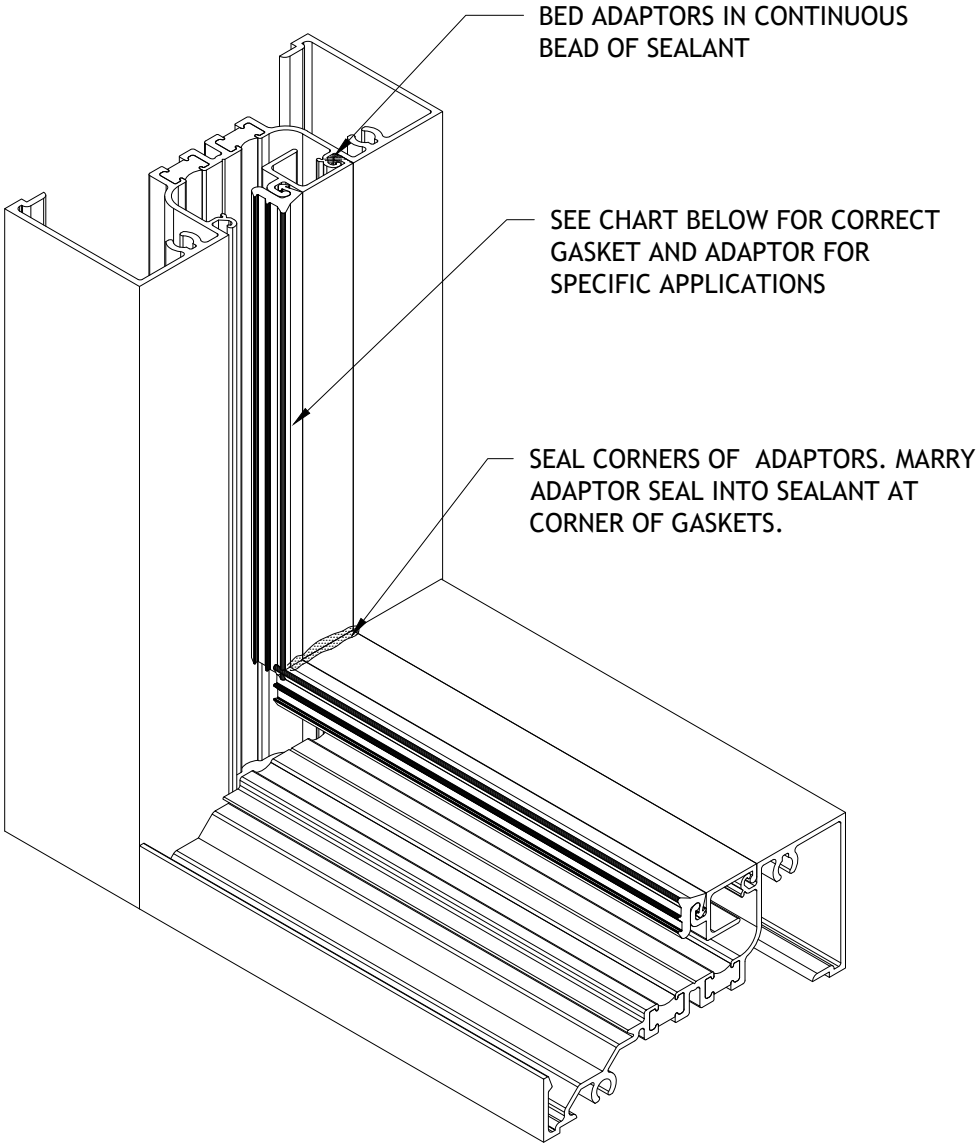

NOTE:
ADAPTORS SHOULD BE INSTALLED ON INTERIOR SIDE OF ALL GLAZING OPTIONS.

GLASS	ADAPTOR	GASKETS	GLASS	ADAPTOR	GASKETS
1/4"	FG-3194	FG-1133 Both Sides	11/16"	FG-3237	FG-1133 & FG-1134
5/16"	FG-3236	FG-5125 Both Sides	3/4"	FG-3237	FG-1134 Both Sides
3/8"	FG-3236	FG-1133 & FG-5125	13/16"	N/A	Not Available
7/16"	FG-3236	FG-1133 Both Sides	7/8"	None	FG-5125 Both Sides
1/2"	FG-3237	FG-5125 Both Sides	15/16"	None	FG-1133 & FG-5125
9/16"	FG-3237	FG-1133 & FG-5125	1"	None	FG-1133 Both Sides
5/8"	FG-3237	FG-1133 Both Sides	1 1/16"	None	FG-1133 & FG-1134
5/8"	NONE	FG-3129 Both Sides	1 1/8"	None	FG-1134 Both Sides

EXPANSION MULLION INSTALLATION

MULTIPLE UNITS MAY REQUIRE THE USE OF AN EXPANSION MULLION IF THE TOTAL WIDTH OF THE OPENING EXCEEDS 24 FEET. IN THESE CASES, LOCATE EXPANSION MULLIONS NO GREATER THAN 20 FEET ON CENTER. LOCATE SPLICE IN SILL RECEPTOR NO MORE THAN 12 FEET ON CENTER. A MINIMUM OF 7/16" CLEARANCE BETWEEN THE JAMB AND THE SILL RECEPTOR END DAM MUST BE PROVIDED TO ALLOW FOR FRAME INSTALLATION WHEN USING EXPANSION MULLIONS. THIS WILL ALLOW THE MINIMUM 3/8" CLEARANCE NEEDED FOR THE NEXT FRAME ASSEMBLY TO BE ROTATED INTO POSITION AND INTERLOCKED WITH THE FRAME ASSEMBLY ALREADY INSTALLED. ONCE IN POSITION, UNITS SHOULD BE CENTERED INTO THE OPENING TO PROVIDE EQUAL CLEARANCE A THE JAMBS. OLDCASTLE BUILDINGENVELOPE RECOMMENDS THE USE OF THE FG-2188 FILLER IN THE HEAD AND JAMBS TO IMPROVE THE PERIMETER SEAL.

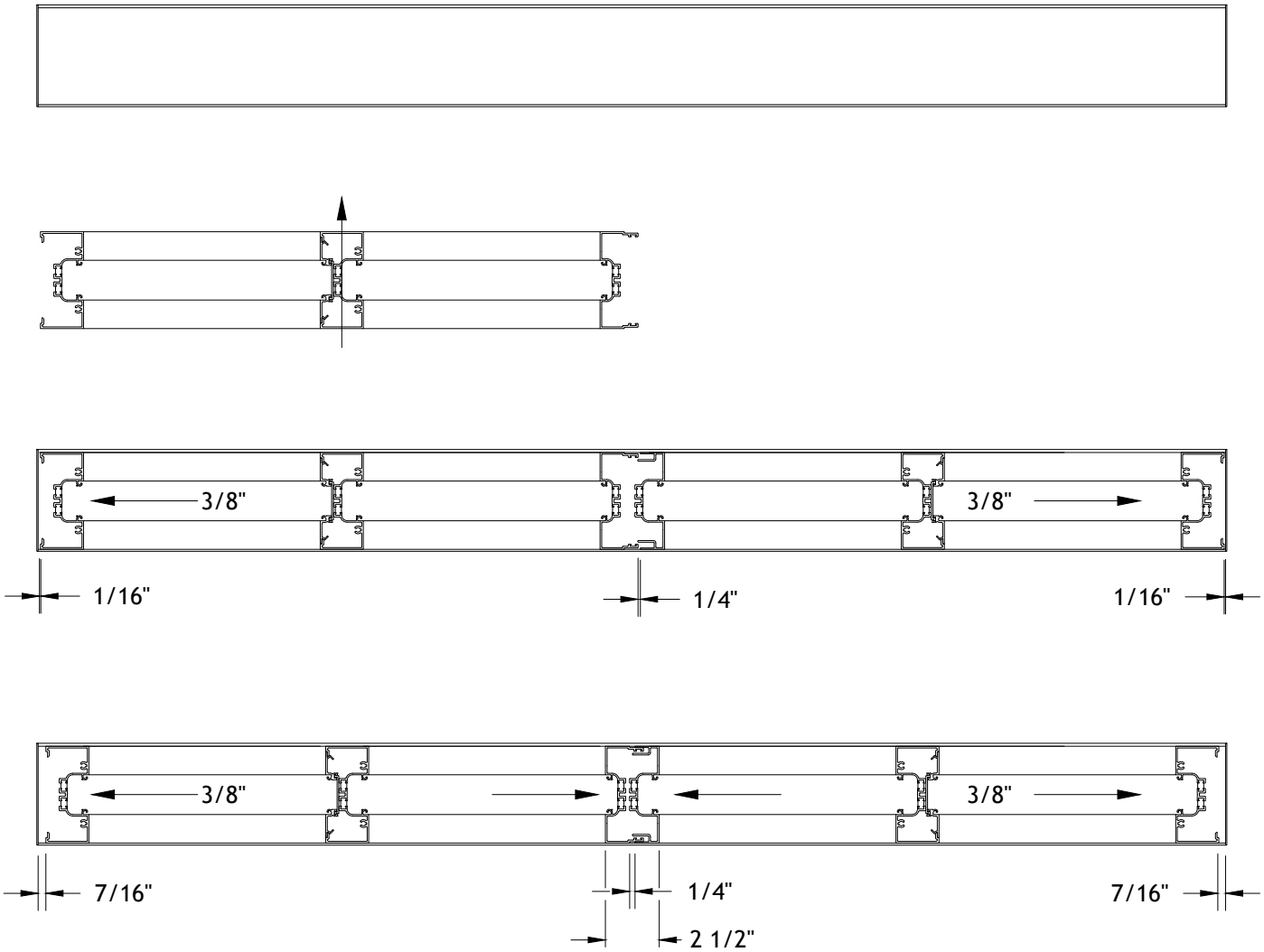

CORNER INSTALLATION

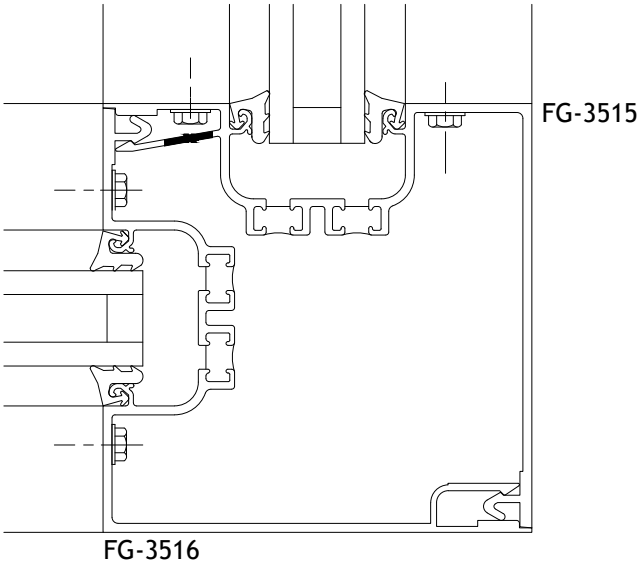

INSIDE OR OUTSIDE 90 DEGREE CORNER

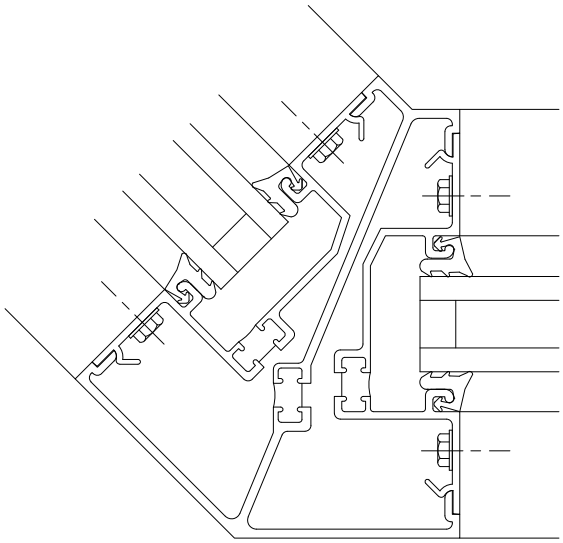

INSIDE OR OUTSIDE 135 DEGREE CORNER

DOOR FRAME INSTALLATION

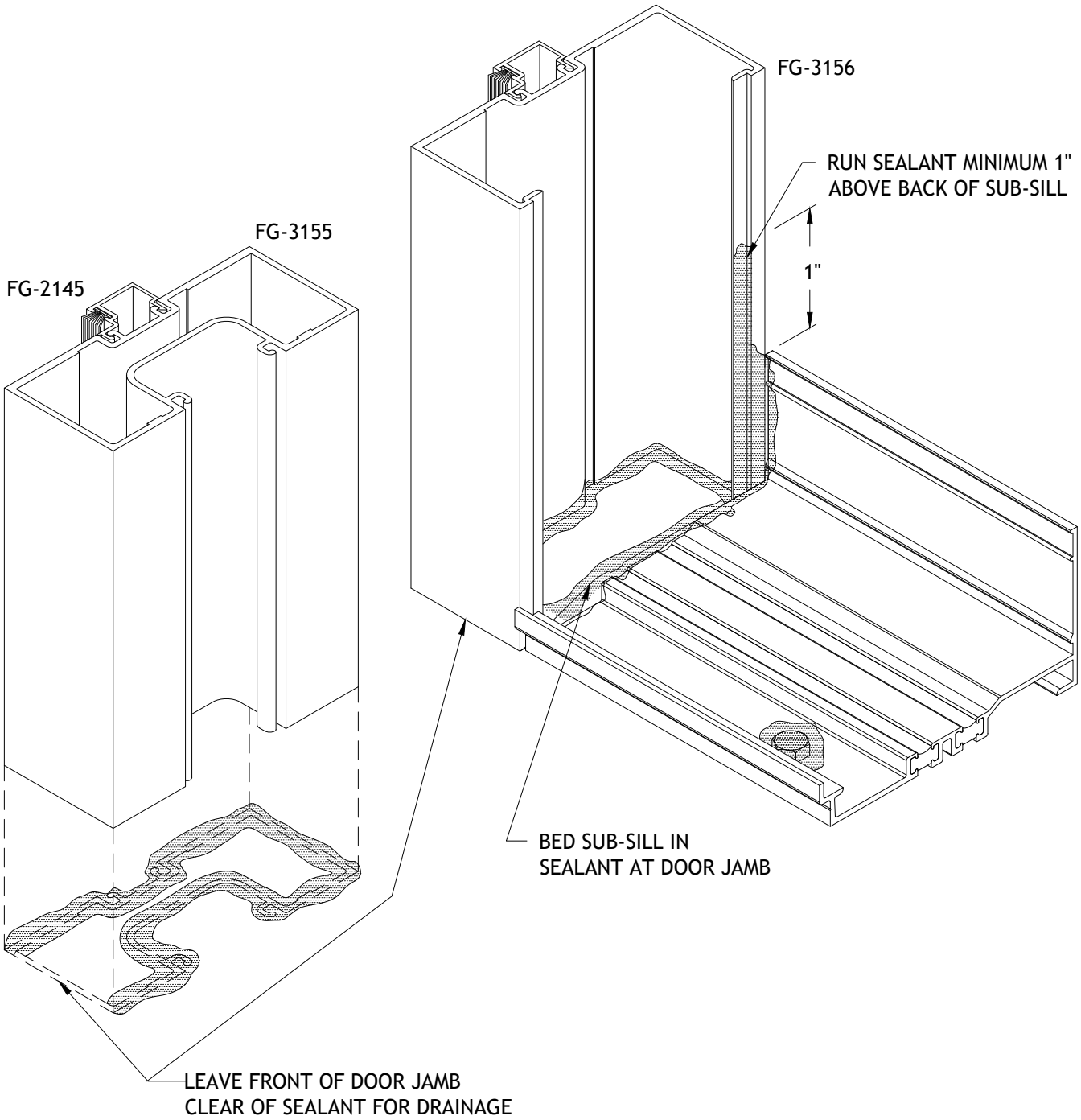

NOTES:

1) USE SHEAR BLOCKS AS SHOWN IN FRAME ASSEMBLY SECTION OF THIS MANUAL TO SECURE HORIZONTALS TO TUBULAR FRAMES.

2) DOOR FRAME IS ANCHORED BY FASTENERS THROUGH THRESHOLD AND DOOR FRAME HEADER.

3) DO NOT FABRICATE STANDARD 2 PIECE POUR & DEBRIDGED FRAME EXTRUSIONS FOR DOOR FRAMES. IF THERMAL FRAME IS REQUIRED,OPTIONAL THERMAL DOOR FRAME FG-3389 MAY BE USED IN CONJUNCTION WITH OLDCASTLE BUILDINGENVELOPE THERMAL DOORS.

4) WHEN USING THE CENTER SET SYSTEM, THE TWO-PIECE OR TUBULAR FRAMING OPTION ARE AVAILABLE AS SHOWN ABOVE. WHEN USING EITHER THE FRONT SET OR BACK SET SYSTEM ONLY THE TUBULAR OPTION IS AVAILABLE. THE VERTICAL FOR THE FRONT OR BACK SET OPTIONS IS FG-3287.

PARTS LIST

SERIES 3000XT

FG-3506	Open Back Head / Jamb / Mullion
FG-3517	Open Back Heavy Mullion
FG-3520	Expansion Mullion (mates w/ FG-3519)
FG-3519	Expansion Mullion (mates w/ FG-3520)
FG-3514	Open Back Filler
FG-3509	Outside Glazed Intermediate Horizontal
FG-3512	Inside Glazed Intermediate Horizontal
FG-3510	Sill
FG-3144	Glass Stop for Outside Glazing
FG-3210	Heavy Glass Stop for Inside Glazing
FG-3511	Sill Receptor

SERIES 3000XT AUXILIARY EXTRUSIONS

MO-678	Head Receptor
MO-244	Receptor Face
FG-3515	Center Set 90° Corner
FG-3516	Center Set 90° Corner (Self-Mating 180°)
FG-3322	Center Set 135° Corner
FG-3321	Center Set 135° Corner Filler (2 per corner)
FG-2188	Vinyl Filler for Caulk Stop 12' lg.
FG-3218	Vinyl Pocket Filler for Window Applications 12' lg.
FG-3194	Glazing Adaptor for 1/4" glass
FG-3237	Glazing Adaptor for 1/2", 9/16",5/8", 11/16" & 3/4"
FG-3236	Glazing Adaptor for 5/16", 3/8" & 7/16"

PARTS LIST

SERIES 3000XT ACCESSORIES

FG1000-FP-2	Water Diverter
UW-466	2" Wide Silicone Sheet for splicing of sill receptors
FG3000-FP-46	End Dam for FG-3511
FG3000-FP-60	Shear Block for FG-3506
AC-119-1	Shear Block for FG-3509, FG-3512 & FG-3510
FG3000-FP-58	Head Anchor for FG-3506
FG3000-FP-59	Head Anchor for FG-3510

SERIES 3000XT ACCESSORIES FASTENERS & DRILL JIGS

FS-8	#14 X 1" H.H.S.T.S. Screw Spline Assembly Screw
FS-9	#14 X 1-1/2" H.H.S.T.S. Shear Block Attachment Screw
FS-55	#10 x 1/2" P.R.H. Attachment of Shear Blocks at Horizontals
DJ-8	Drill Fixture for Center Set Shear Block or Screwspline Assembly

SERIES 3000XT ACCESSORIES GASKETS & SETTING BLOCKS

FG-1133	1" Glazing Gasket
FG-1134	Light Gasket
FG-3129	5/8" Glazing Gasket
FG-5125	Heavy Gasket
CW-998	Gasket for Expansion Mullions
V-11	Gasket for Head Receptor
FG-3220	Setting Block for FG-3509 horizontal and FG-3510 sill
FG-3278	Setting Block for FG-3512
FG-3523	Setting Block for FG-3293, FG-3294 & FG-3334
GP-152	Side Block for Deep Pocket
GP-154	Side Block for Shalllow Pocket