Oldcastle BuildingEnvelope®
A CRH COMPANY

ArmorOne™ Plus storefront

installation & glazing manual

NOTE

THE INSTALLATION DETAILS FOUND IN THIS PACKAGE ARE GENERIC AND ARE FOR REPRESENTATION ONLY WITH THE INTENT OF GIVING THE INSTALLATION TEAM A VISUAL REPRESENTATION AS TO HOW THE ASSEMBLIES TYPICALLY INSTALL. THE SHOP SUBMISSION DRAWINGS AND DETAILS ARE THE GOVERNING DOCUMENTS AND AS SUCH THIS PACKAGE IS TO BE USED ONLY AS A RESOURCE.
FOLLOW SEALANT MANUFACTURERS' RECOMMENDATIONS FOR USE AND APPLICATION OF ALL STRUCTURAL SILICONE SEALANT AND WEATHER SEAL SILICONE SEALANT.
CUSTOMER / PROJECT QUALITY ASSURANCE PROCEDURES ARE SEPARATE DOCUMENTS AND ARE TO BE FOLLOWED IN CONJUNCTION WITH THIS MANUAL.

1-866-OLDCASTLE (653-2278) **OBE.com**

Version: 2020-0803

Copyright © 2020 Oldcastle BuildingEnvelope®
All rights reserved.
™ ® Trademarks of Oldcastle BuildingEnvelope and its affiliated companies or respective owners.

Table of Contents

IMPORTANT NOTICE: 3
GENERAL INFORMATION 3
BUILDING CODES 3
STRUCTURAL SEALANTS 3
PERIMETER SEALANTS 3
MATERIAL AND WORK ACCEPTANCE 3
MATERIAL HANDLING 4
EXPANSION JOINTS 4
CLEANING 4
THERMAL IMPROVEMENT SUGGESTIONS 4
FABRICATION SUGGESTIONS 4
GENERAL CONSTRUCTION NOTES 5
FRAME FABRICATION 6
1.0 Establish Frame Size 6
2.0 Cut Material to Length 8
3.0 Vertical Hole Prep Locations 9
4.0 Head / Sill Fabrication 10
5.0 Jamb Fabrication 11
6.0 Sill Receptor Fabrication 12
SILL ASSEMBLY / INSTALLATION 13
7.0 Sill Receptor End Dam Fabrication and Assembly 13
8.0 Sill Receptor Installation 13
9.0 Sidelite Sill Receptor Installation at Door Frame 14
FRAME ASSEMBLY / INSTALLATION 15
10.0 Frame Panel Assembly 15
11.0 Installation of Framing Panels 15
12.0 Corner Condition 17
GLAZING 19
13.0 Wet Glazing 19
13.1 Preparing Wet Glazing Option 19
13.2 Setting Glass and Exterior Gasket 19
13.3 Application of Interior Structural Sealant 20
14.0 Dry Glazing 21
14.1 Preparing Gasket and Installing Interior Gasket 21
14.2 Setting Glass and Interior Gasket 22
PARTS LIST 23

Copyright © 2020 Oldcastle BuildingEnvelope®
All rights reserved.
™ ® Trademarks of Oldcastle BuildingEnvelope and its affiliated companies or respective owners.

IMPORTANT NOTICE:

Completely read these instructions prior to beginning work. These recommendations are for general erection/installation procedures only. For actual job conditions, see shop drawings if applicable. For perimeter anchor types and spacing, refer to the approved shop drawings or consult structural engineer/project design professional.

GENERAL INFORMATION

Oldcastle BuildingEnvelope® ArmorOne™ Plus (2-1/2" x 5") thermally broken storefront system represents the latest in delayed forced-entry performance. This system was especially designed to meet the stringent requirements of ASTM E2395, *Standard Specification for Voluntary Security Performance of Window and Door Assemblies with Glazing Impact*, for glass and glazing systems. Proper use of this system will assure optimal results in erection and long-term performance. ArmorOne™ Plus was designed and tested to work in unison with ArmorGarde™ or ArmorGarde™ Plus glazing for delayed forced-entry security applications for schools, daycares, pharmacies, luxury brands, jewelers, wineries, restaurants, and other business where security is a priority.

Check all shop drawings and installation instructions to become familiar with the project before work begins. The shop drawings take precedence and include specific details for the project. The installation instructions are of a general nature and cover the most common conditions.

BUILDING CODES

Oldcastle BuildingEnvelope® does not control the application nor selection of its product configurations, sealant, or glazing materials, and assumes no responsibility thereof. It is the responsibility of the owner, architect, and installer to make these selections in strict compliance with applicable laws and building codes.

STRUCTURAL SEALANTS

DOWSIL™ 995 Silicone Structural Sealant was used on the ArmorOne™ Plus test specimen for glass to metal adhesion.

PERIMETER SEALANTS

Due to varying job conditions, all perimeter sealants used should be approved by the sealant manufacturer to ensure the sealant will function for the conditions shown on these instructions and shop drawings. Sealants must be compatible with all surfaces where adhesion is required, including other sealant surfaces. Use primers where directed by sealant manufacturer. Be sure to properly store sealants at recommended temperature and check container for remainder of shelf life before using.

MATERIAL AND WORK ACCEPTANCE

OLDCASTLE® BUILDINGENVELOPE MATERIALS

Check all material upon arrival for quality and to assure against shipping damage. Any visible damage must be noted on the freight bill at the time of receipt. If a claim is required, then the receiving party must process a claim with the freight company.

OTHER TRADES WORK

Completely check construction that will receive your materials against contract documents. Notify general contractor by letter of any discrepancies before proceeding with work. Failure to do so constitutes acceptance of work by other trades.

Copyright © 2020 Oldcastle BuildingEnvelope®
All rights reserved.

™ ® Trademarks of Oldcastle BuildingEnvelope and its affiliated companies or respective owners.

MATERIAL HANDLING

Handle the material carefully. Do not drop from the truck. Stack with adequate separation so that the material will not rub together. Store material off the ground. Protect against the elements and other construction hazards by using a well-ventilated covering away from other trades. Remove material from package if it is wet or located in a damp area.

SHOP

- Cardboard wrapped or paper interleaved material must be kept dry.
- Check arriving materials for quantity and keep record of where various materials are stored.

JOB SITE

- Material at job site must be stored in a safe place well removed from possible damage by other trades.
- Cardboard wrapped or paper interleaved materials must be kept dry.
- Keep record of where various materials are stored.
- Protect materials after erection. Cement, plaster, and other alkaline solutions are very harmful to the finish.

EXPANSION JOINTS

Expansion joints and perimeter seals shown in these instructions and in the shop drawings are shown at standard size. Actual dimensions may vary due to perimeter conditions and/or differences in metal temperature between the time of fabrication and time of installation. For example, a 12-foot unrestrained length of aluminum extrusion can expand or contract 3/32 of an inch over a 50-degree Fahrenheit change. Any movement potential should be accounted for at time of the installation.

CLEANING

Cement, plaster, terrazzo, alkaline and acid-based materials used to clean masonry are very harmful to finishes and should be removed immediately or permanent staining will occur. A spot test is recommended before any cleaning agent is used. Aluminum shall be cleaned with plain water containing a mild detergent or a petroleum product, such as white gasoline, kerosene, or distillate. No abrasive agent shall be used.

THERMAL IMPROVEMENT SUGGESTIONS

To maintain or improve wall installation, the following items should be considered:

1. Blinds or drapes prevent warm air from washing the window.
2. Warm air ventilators too far from window will not adequately wash the window with air to prevent condensation.
3. In extreme conditions, the fan of the heating systems should not cycle on and off but run continuously.
4. Some heating systems have a water injection feature that can raise humidity levels. The higher the humidity levels the more likely condensation or frost will form. Raising the temperature and reducing humidity will usually solve this problem.
5. On rare occasions, an extremely cold storm may cause frost to appear on the glass or framing. A space heater and electric fan blowing along the plane of the window wall can reduce or eliminate this temporary condition.

FABRICATION SUGGESTIONS

Oldcastle BuildingEnvelope® recommends the use of our EZ Punch tooling for faster and more accurate fabrication of wall systems. If hand fabricating the mullions, drill fixtures are available to improve accuracy.

Copyright © 2020 Oldcastle BuildingEnvelope®
All rights reserved.

™ ® Trademarks of Oldcastle BuildingEnvelope and its affiliated companies or respective owners.

GENERAL CONSTRUCTION NOTES

A. Study these instructions, shop drawings, erection drawings, and architectural drawings before starting any work. Follow installation and glazing instructions.
B. All materials are to be installed plumb and level.
C. All work should start from an established benchmark and column centerlines established by the architect and the general contractor.
D. Do not install wall if there is a walkway with a downslope towards an entrance or a storefront.
E. Completely check construction which will receive your materials against contract documents. Notify the general contractor by letter of any discrepancies before proceeding with your work since this constitutes acceptance of work by other trades.
F. Protect all aluminum to be placed directly in contact with uncured masonry or incompatible materials with a heavy coat of zinc chromate or bituminous paint.
G. Coordinate protection of installed materials with general contractors and other trades.
H. After sealant is set and a representative amount of the wall has been glazed (500 square feet or more), run a water hose test to check installation. On large jobs, hose test should be repeated during glazing operation. Test should be conducted in accordance with AAMA 501.2 specifications. This test should not be performed at entrances installed in the system.

Copyright © 2020 Oldcastle BuildingEnvelope®
All rights reserved.

™ ® Trademarks of Oldcastle BuildingEnvelope and its affiliated companies or respective owners.

FRAME FABRICATION

1.0 Establish Frame Size

NOTE: The storefront opening must be square and plumb before installation.

When measuring the rough opening, take multiple measurements and use the smallest dimension. This assures a proper fit of the storefront system. For the rough opening's width, measure the top, middle, and bottom of the opening. For the rough opening's height, measure the left, center, and right side of the opening.

Measure width of rough opening.

A. Measure opening at bottom.
B. Measure opening at center.
C. Measure opening at top.

Measure height of rough opening.

A. Measure opening from top to bottom of left side.
B. Measure opening from top to bottom of middle.
C. Measure opening from top to bottom of right side.

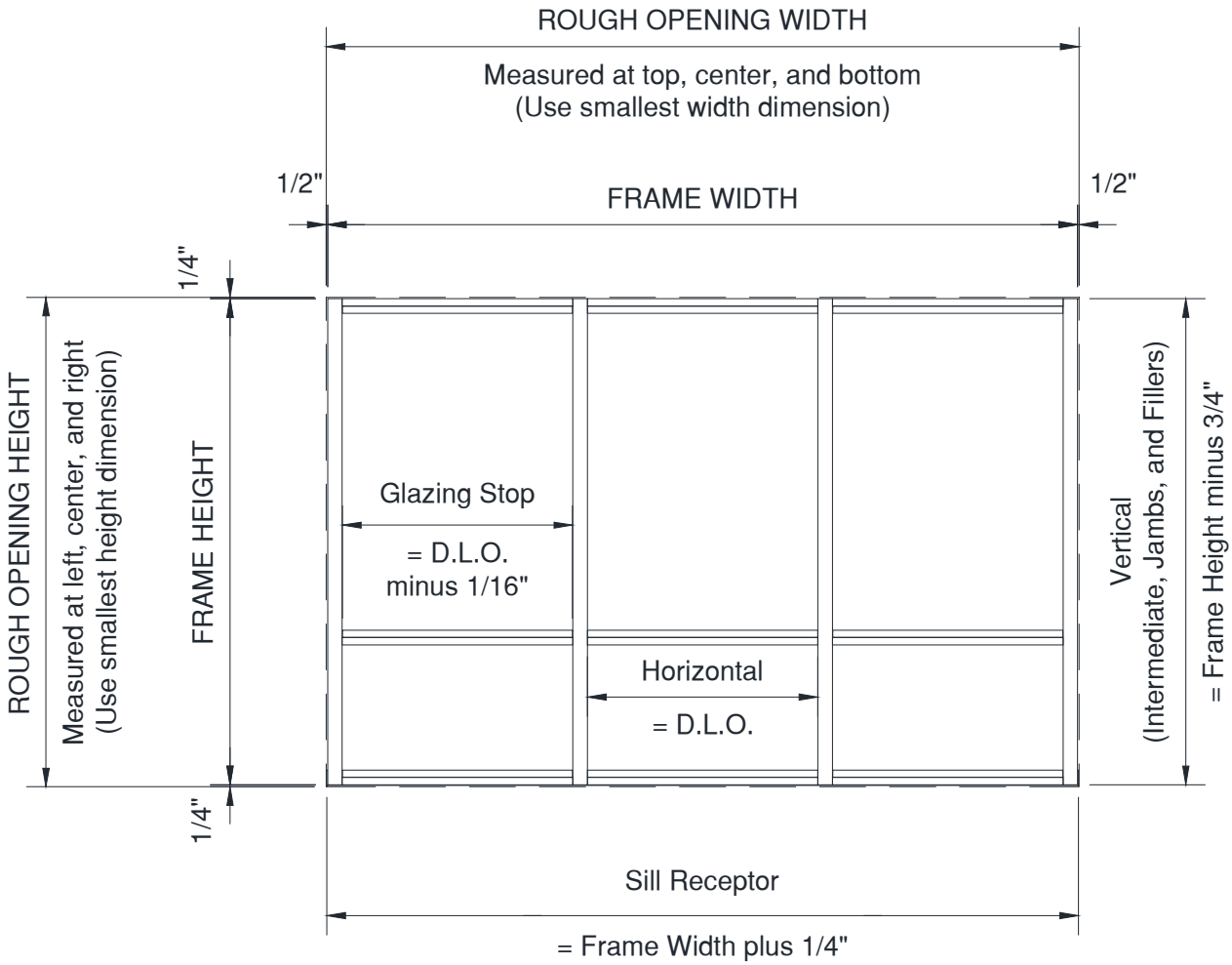

Figure 1: Measuring Rough Opening, Guide without Door

Version: 2020-0803

Copyright © 2020 Oldcastle BuildingEnvelope®
All rights reserved.
™ ® Trademarks of Oldcastle BuildingEnvelope and its affiliated companies or respective owners.

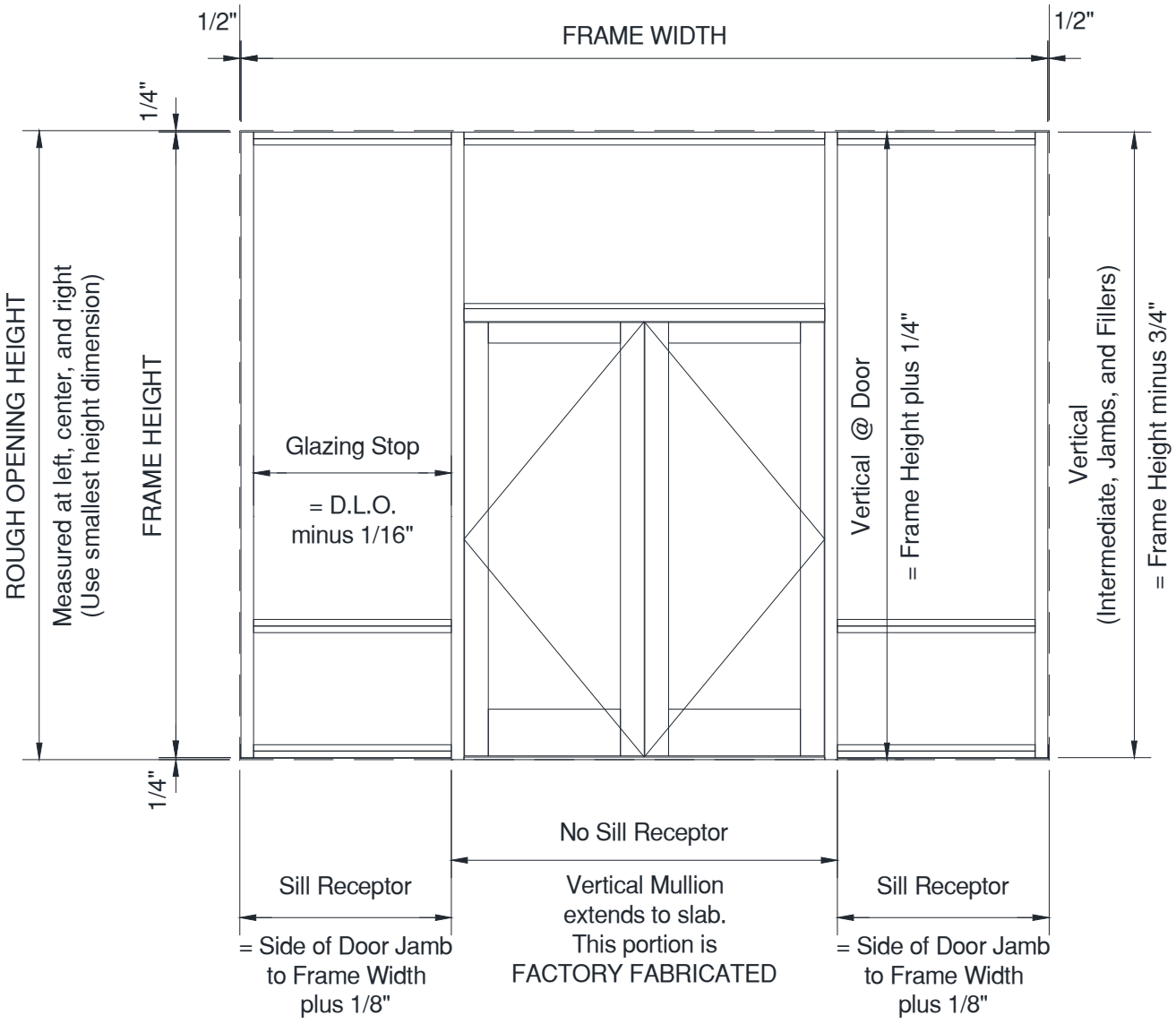

Figure 2: Measuring Rough Opening, Guide with Door

Version: 2020-0803

Copyright © 2020 Oldcastle BuildingEnvelope®
All rights reserved.

™ ® Trademarks of Oldcastle BuildingEnvelope and its affiliated companies or respective owners.

2.0 Cut Material to Length

Framing Members

Frame without Entrance

FG-5260 Sill Receptor at Frames without Doors	Frame Width plus (+) 1/4"

Frame at Entrance Sidelite

Note: Sill Receptor to butt tight against Door Jamb.

FG-5260 Sill Receptor at Entrance Locations	Door Jamb to Frame Width plus (+) 1/4"

Verticals

FG-5217 and FG-5255 Filler	Frame Height minus (-) 3/4"
FG-5250 and FG-5251 Vertical	
FG-5250 and FG-5251 Jamb	
FG-5254 Jamb Filler	
FG-5256 and FG-5257 Expansion Vertical	
FG-5261 and FG-5262 Corner Mullion	

Horizontals

FG-5214 and FG-5250 Head	D.L.O.
FG-5214 Horizontal	
FG-5214 Sill	
FG-5254 Head Filler	
FG-5258 Glass Stops	D.L.O. minus (-) 1/16"

Accessories: Dry Glaze

CW-998 Bulb Gasket	Frame Height minus (-) 3/4"
FG-1133 Exterior Gasket at Horizontal	D.L.O. plus (+) 1/4" per foot
FG-1133 Exterior Gasket at Vertical	
FG-5949 Interior Gasket at Horizontal	
FG-5949 Interior Gasket at Vertical	D.L.O. plus (+) 1/4" per foot plus (+) 1-1/2"

Accessories: Wet Glaze

CW-998 Bulb Gasket	Frame Height minus (-) 3/4"
FG-1133 Exterior Gasket at Horizontal	D.L.O. plus (+) 1/4" per foot
FG-1133 Exterior Gasket at Vertical	
FG-5185 Spacer Gasket at Horizontal	
FG-5185 Spacer Gasket at Vertical	D.L.O. plus (+) 1/4" per foot plus (+) 1-7/8"

Copyright © 2020 Oldcastle BuildingEnvelope®
All rights reserved.

™ ® Trademarks of Oldcastle BuildingEnvelope and its affiliated companies or respective owners.

3.0 Vertical Hole Prep Locations

Drill or punch holes in Verticals for attaching Horizontals.

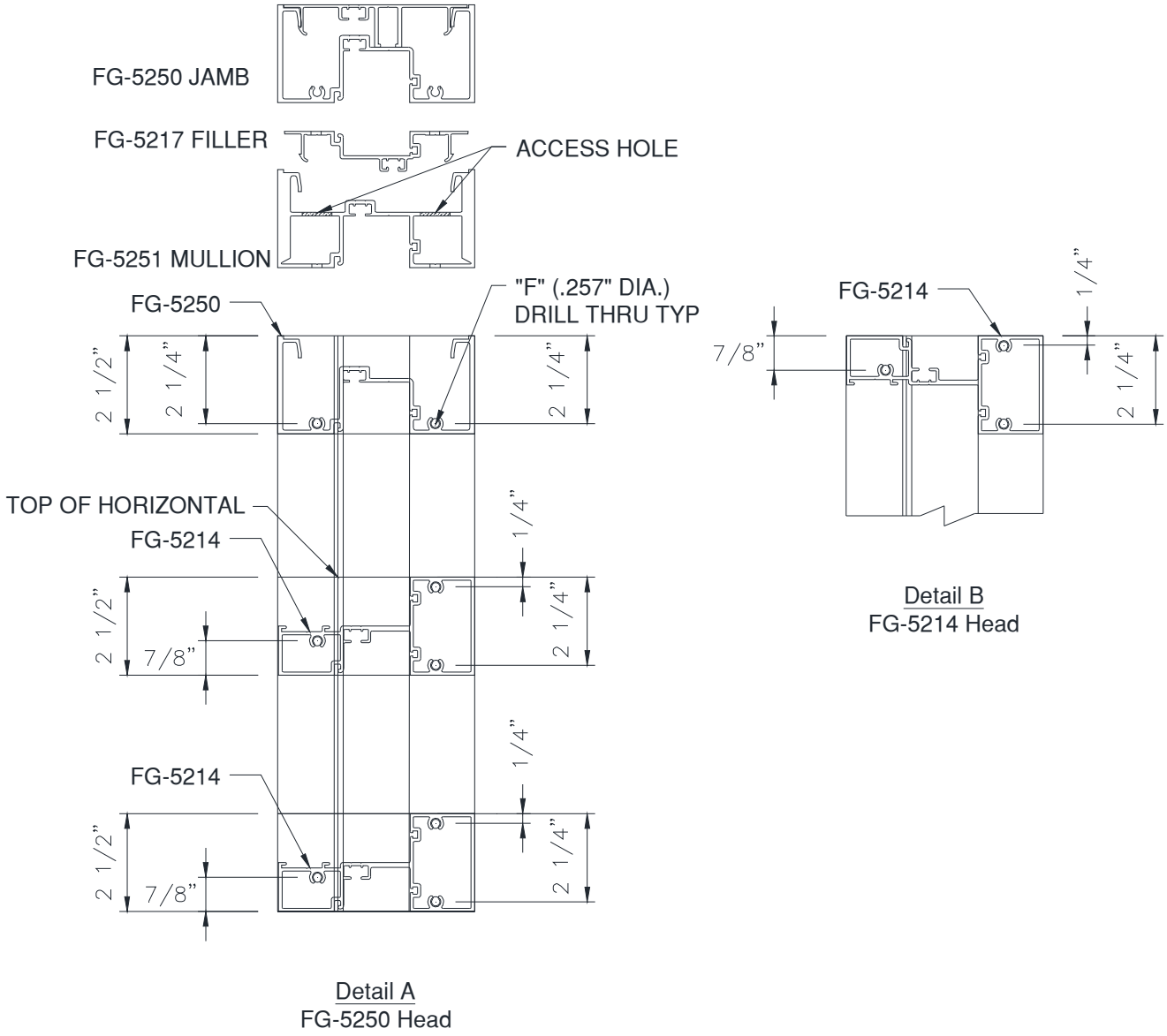

Figure 3: Vertical Mullion Fabrication

Version: 2020-0803

Copyright © 2020 Oldcastle BuildingEnvelope®
All rights reserved.
™ ® Trademarks of Oldcastle BuildingEnvelope and its affiliated companies or respective owners.

4.0 Head / Sill Fabrication

4.1 Prepare Sill by placing pilot holes 4-1/4" from back face of metal, reference *Figure 4* for hole location. Holes should be countersunk and placed 1-1/2" and 4-1/2" from each end.

4.2 Prepare Head by placing pilot holes 2-3/16" from back face of metal, reference *Figure 5* for hole location. Through-holes should be placed 1-1/2" and 4-1/2" from each end.

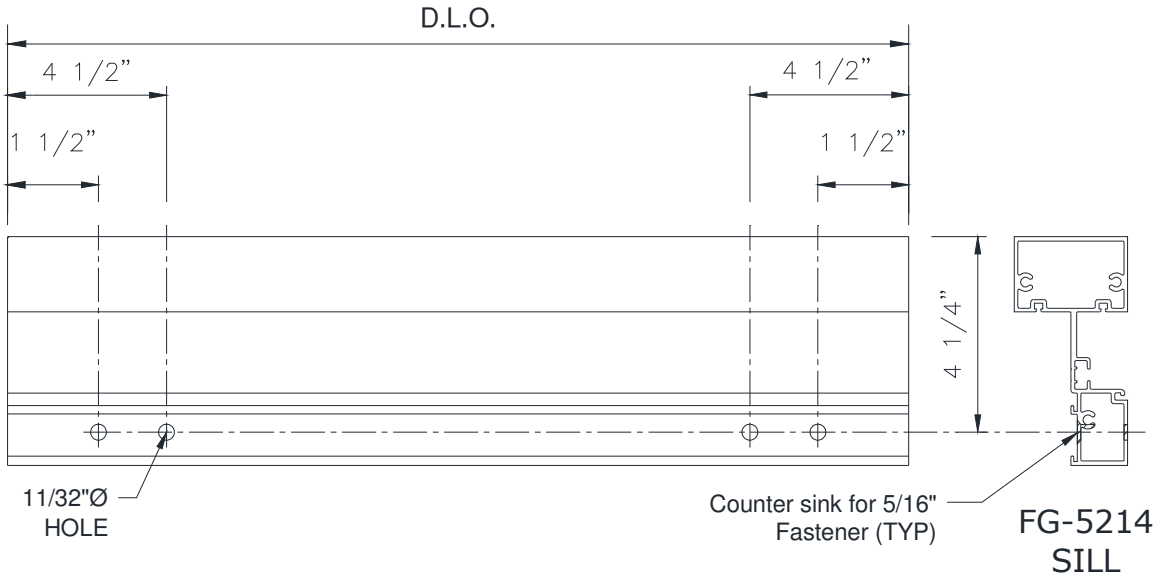

Figure 4: Sill Fabrication

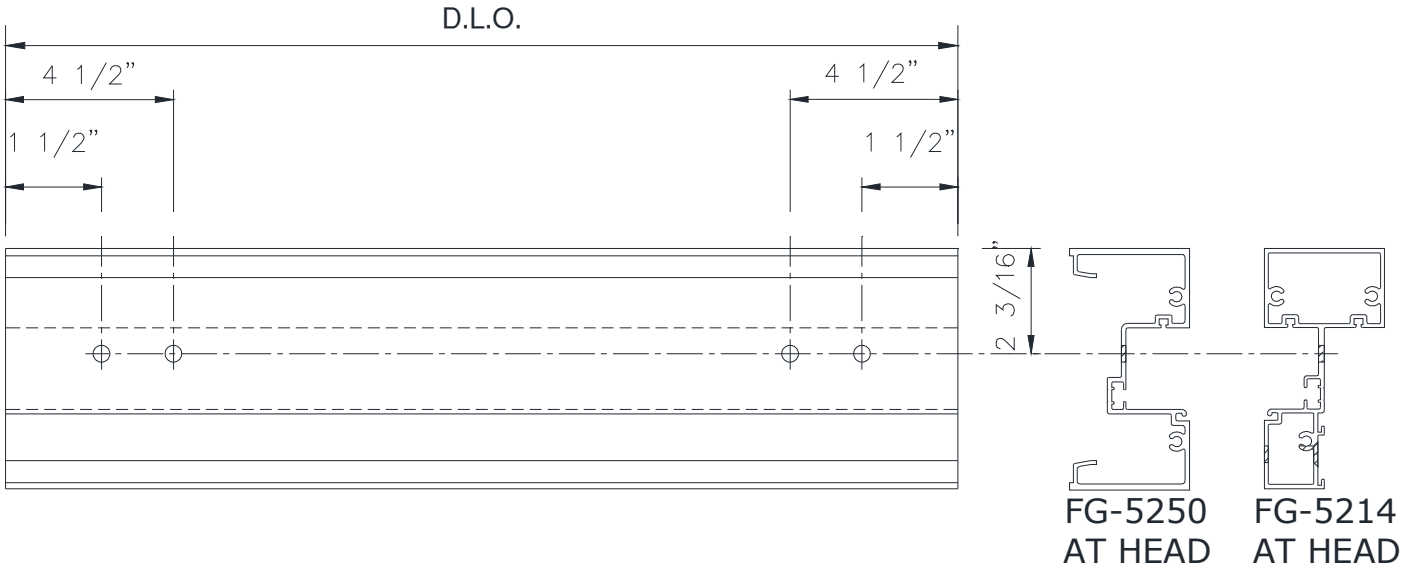

Figure 5: Head Fabrication

Version: 2020-0803

Copyright © 2020 Oldcastle BuildingEnvelope®
All rights reserved.

™ ® Trademarks of Oldcastle BuildingEnvelope and its affiliated companies or respective owners.

5.0 Jamb Fabrication

When required by an engineer, holes for anchors must be fabricated in the Jamb. The number of anchors will vary; reference approved shop drawings and engineered calculations for the exact number and locations. Anchor to substrate using FG-5254 Anchor Plate. If an anchor hole occurs at the intersection of an Intermediate Horizontal, locate the hole as close to the intended location as possible, avoiding the Horizontal. Countersink anchors to allow for flush glazing.

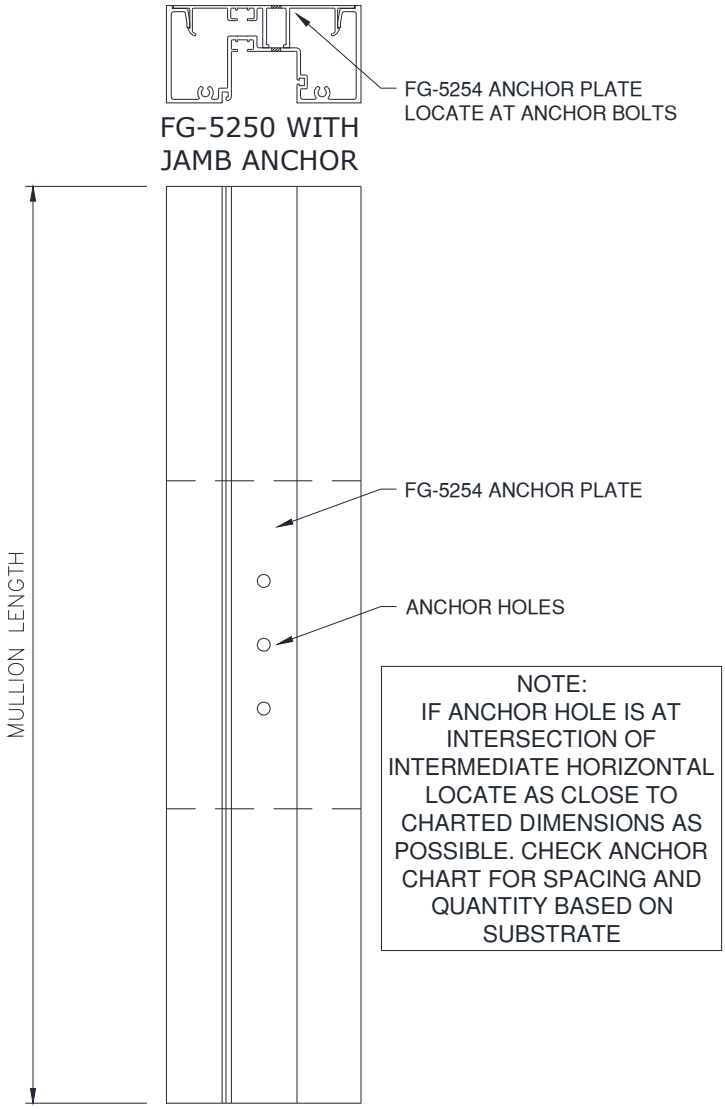

Figure 6: Jamb Fabrication

Version: 2020-0803

Copyright © 2020 Oldcastle BuildingEnvelope®
All rights reserved.

™ ® Trademarks of Oldcastle BuildingEnvelope and its affiliated companies or respective owners.

6.0 Sill Receptor Fabrication

Fabricate FG-5260 Sill Receptor for structural fastener holes. Hole location dimension for fasteners in Sill Receptor are approximate and should ALWAYS be confirmed in project specific shop drawings.

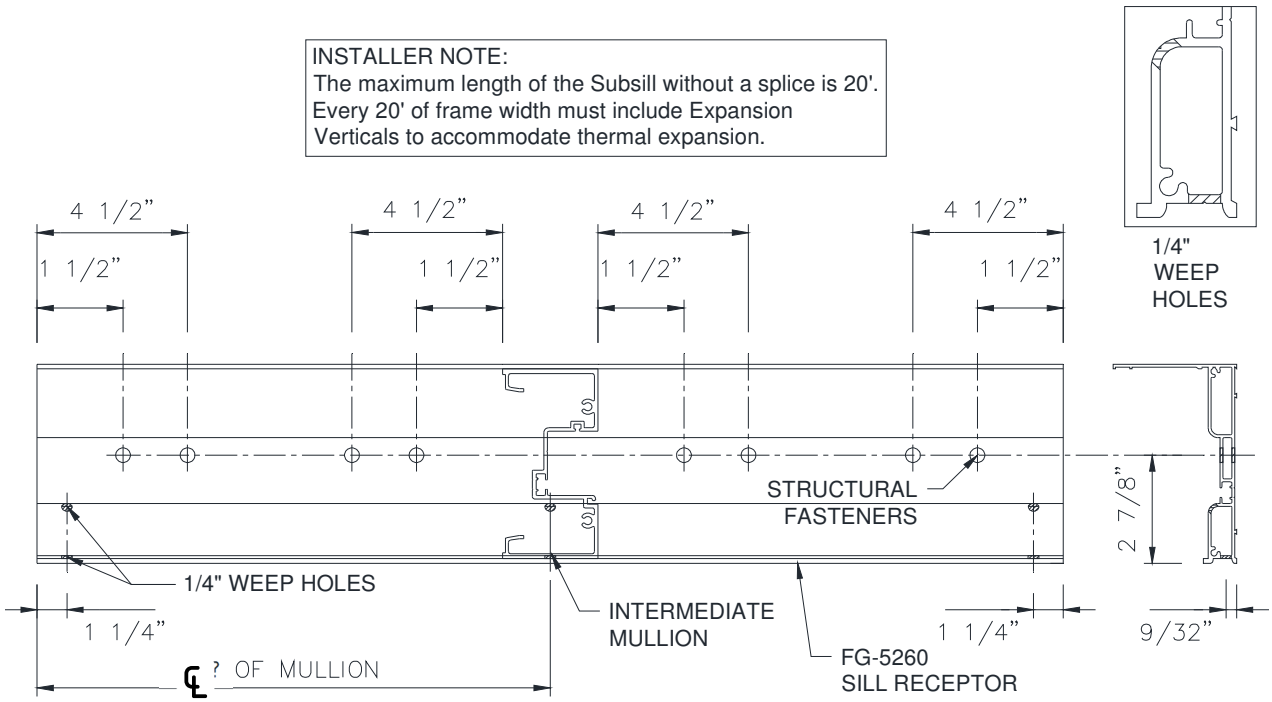

Figure 7: Sill Receptor Fabrication

Version: 2020-0803

Copyright © 2020 Oldcastle BuildingEnvelope®
All rights reserved.

™ ® Trademarks of Oldcastle BuildingEnvelope and its affiliated companies or respective owners.

SILL ASSEMBLY / INSTALLATION

7.0 Sill Receptor End Dam Fabrication and Assembly

Bed End Dam in sealant and attach with (2) FS-320 fasteners.

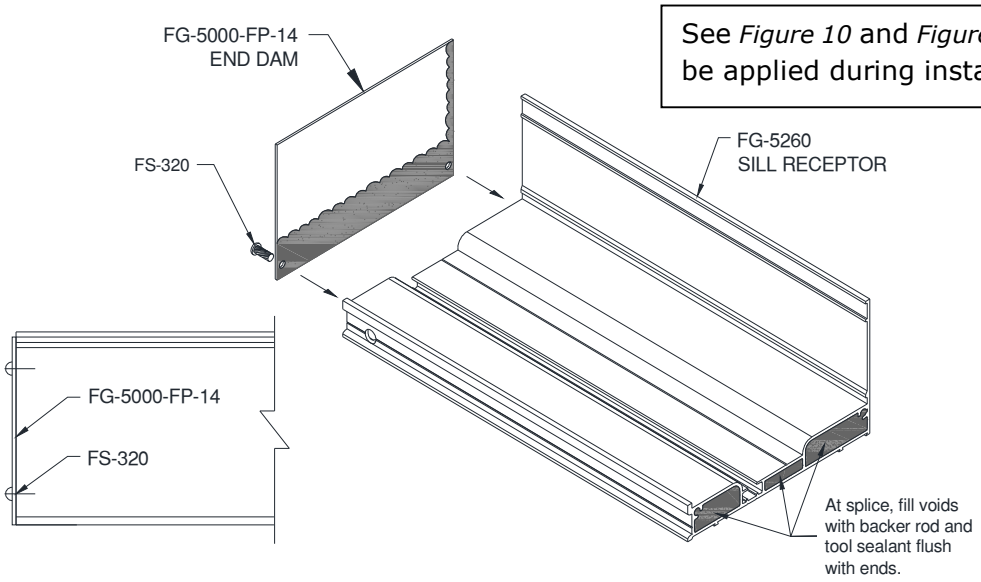

See *Figure 10* and *Figure 11* for sealant to be applied during installation.

Figure 8: Sill Receptor End Dam Attachment

8.0 Sill Receptor Installation

8.1 Position fabricated Sill Receptor with End Dams into opening. Center into opening allowing shim space at Jambs. Shim to level with 1/4" of shim at highpoint, adding shims at each fastener.

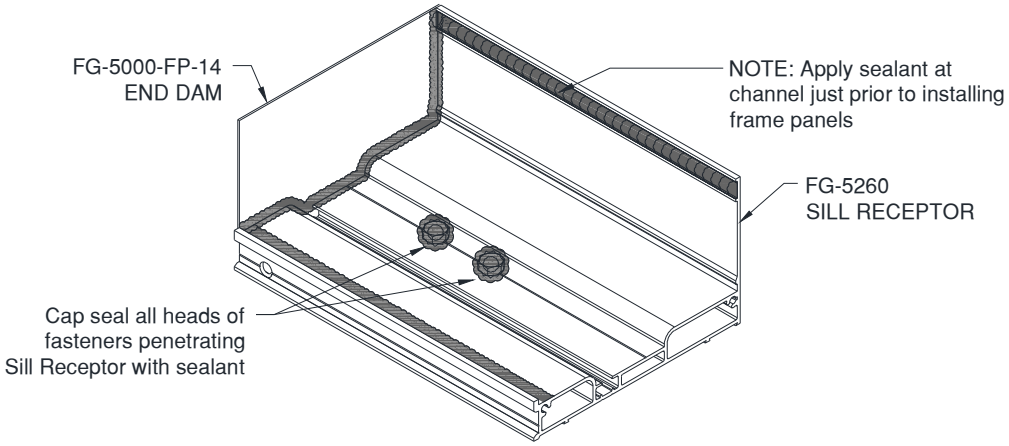

Figure 9: Sill Receptor Installaion and Sealing of End Dam

8.2 Wedge shims tightly between End Dams and Jamb substrate at each end prior to installing frame panels. These shims prevent the End Dams from being dislodged while frame panels are being installed. Completely seal End Dams as shown in *Figure 10*.

8.3 Apply Sealant to Silicone Splice Sheet at all Sill Receptor splices, as shown in *Figure 11*.

8.4 Run a continuous bead of sealant along the full length of the Sill Receptor channel, as depicted in *Figures 10* and *11*, just prior to installing frame panels. Do not allow sealant to harden prior to installing frame panels. Remove excess sealant after panels are installed.

Copyright © 2020 Oldcastle BuildingEnvelope®
All rights reserved.

™ ® Trademarks of Oldcastle BuildingEnvelope and its affiliated companies or respective owners.

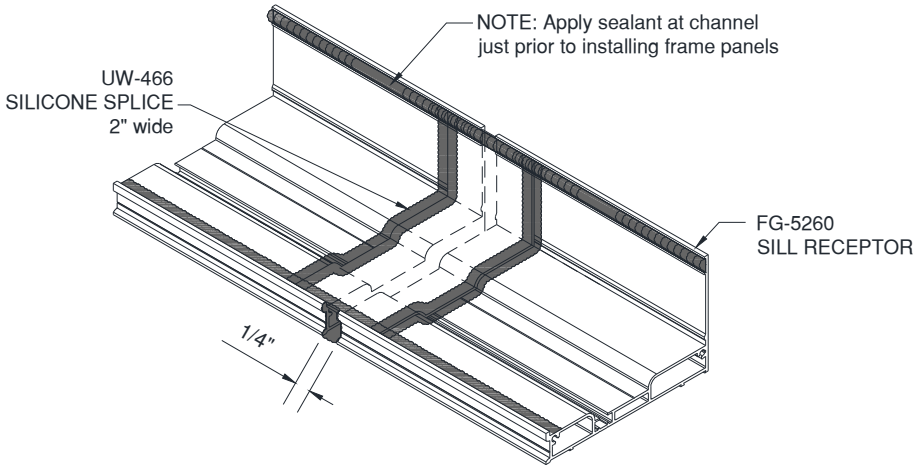

Figure 10: Sill Receptor Splice Installation and Sealant

9.0 Sidelite Sill Receptor Installation at Door Frame

When entrances occur, install entrance frames first. Sill Receptor butts against Door Jamb(s). The Sill Receptor abutting the Door Jamb does not require an End Dam.

Field Note: The bottom of the inside of the Door Jamb Mullion must be sealed to the substrate and the end of the Sill Receptor must also be sealed. Reference Figure *11.*

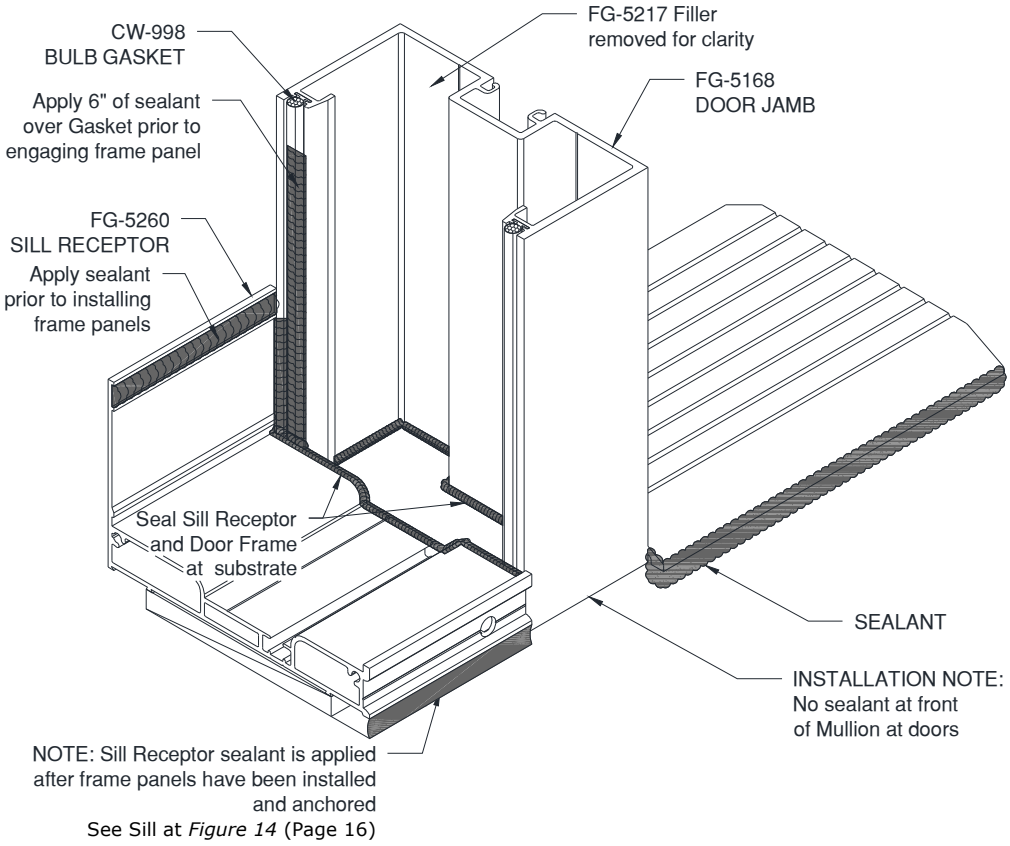

Figure 11: Door Jamb and Sill Receptor Sealant Application

Copyright © 2020 Oldcastle BuildingEnvelope®
All rights reserved.

™ ® Trademarks of Oldcastle BuildingEnvelope and its affiliated companies or respective owners.

FRAME ASSEMBLY / INSTALLATION

10.0 Frame Panel Assembly

10.1 If the FG-5185 Spacer Gasket is pre-installed, remove it and cut per *2.0 Cut Material to Length* (page 8). Set aside.

10.2 Clean framing members at locations where Butyl Tape is noted to be attached. At tape intersection, there should be no gaps.

10.3 Attach Horizontals to Verticals using FS-8 (#14 x 1" STS Spline Screws). Trim excess sealant tape at joints with razor knife. DO NOT PULL TAPE TO TRIM. See *Figure 4* (page **Error! Bookmark not defined.**) for hole prep locations.

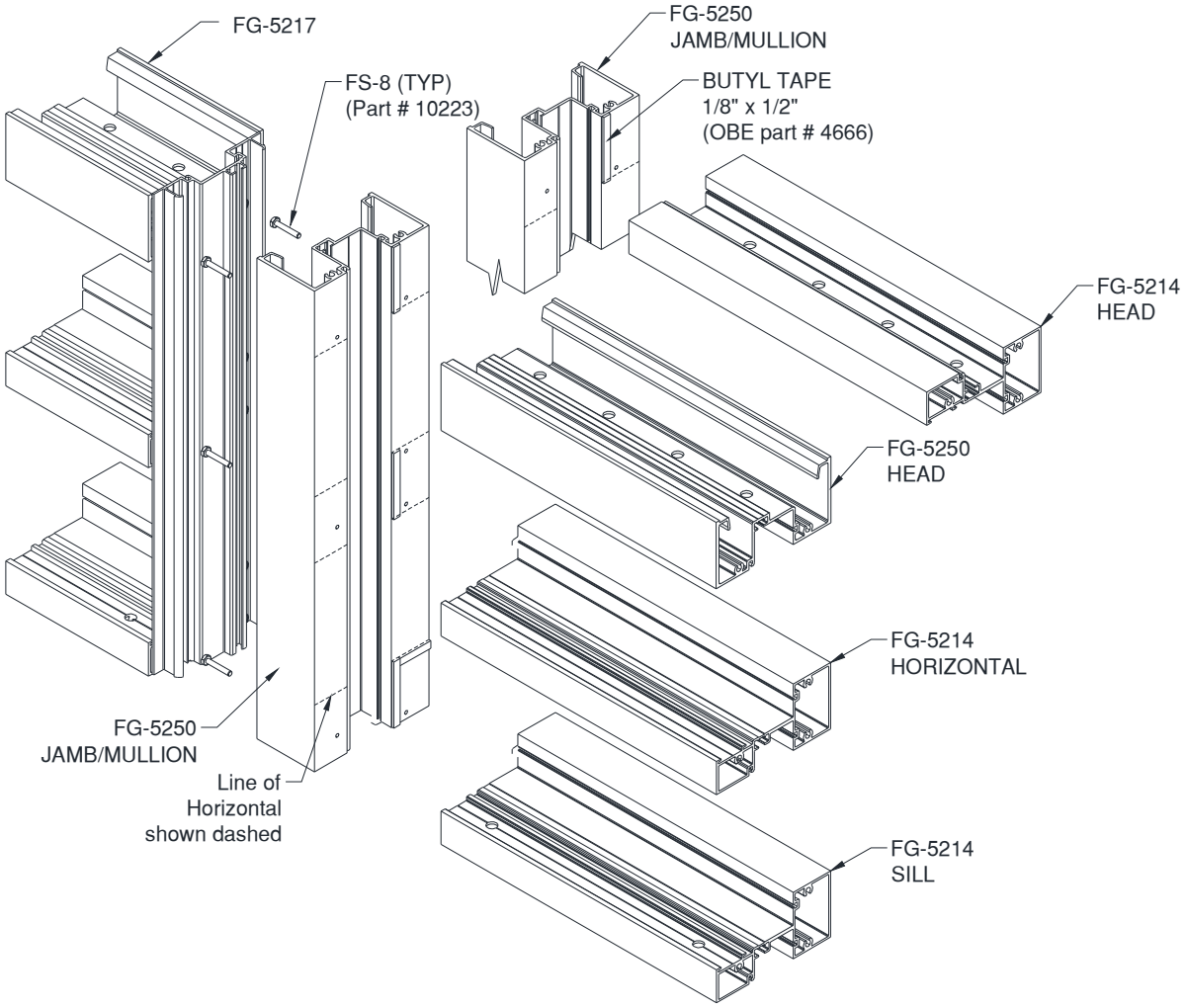

Figure 12: Frame Panel Assembly

11.0 Installation of Framing Panels

11.1 Install assembled frame panels into opening starting at either Jamb and continue working toward the opposite Jamb until the last frame panel is installed. Ensure that the frame panels are pushed tight against the upright leg of the Sill Receptor. Remove excess sealant after panels are installed and anchored.

11.2 Prior to installing each additional panel frame, apply 6" of silicone sealant to bottom of interior snap engagement, as shown below.

Copyright © 2020 Oldcastle BuildingEnvelope®
All rights reserved.

™ ® Trademarks of Oldcastle BuildingEnvelope and its affiliated companies or respective owners.

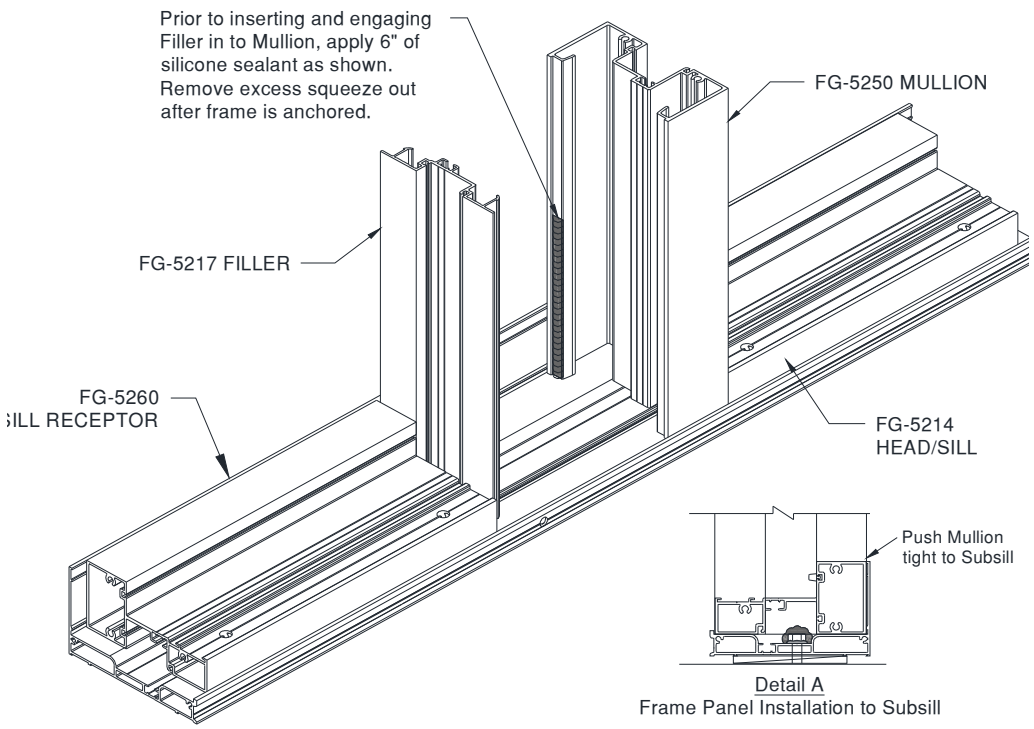

Figure 13: Sealant at Interior at Mullions / Filler

11.3 Plumb Vertical Mullions and match drill holes into substrate at Head. Anchor and shim as shown. It is not necessary to cap seal fasteners at Head. To prevent dimensional buildup, check D.L.O. and diagonal dimensions every 4 bays to ensure correct spacing and frame squareness.

11.4 Once all individual frames are secured to the opening, complete perimeter seal with a continuous bead of sealant across Head and at each Jamb. At the Sill, run a bead across the Sill Receptor.

11.5 Place interior sealant at Jambs and along Sill Receptor, starting from the bottom and sealing up the Jamb.

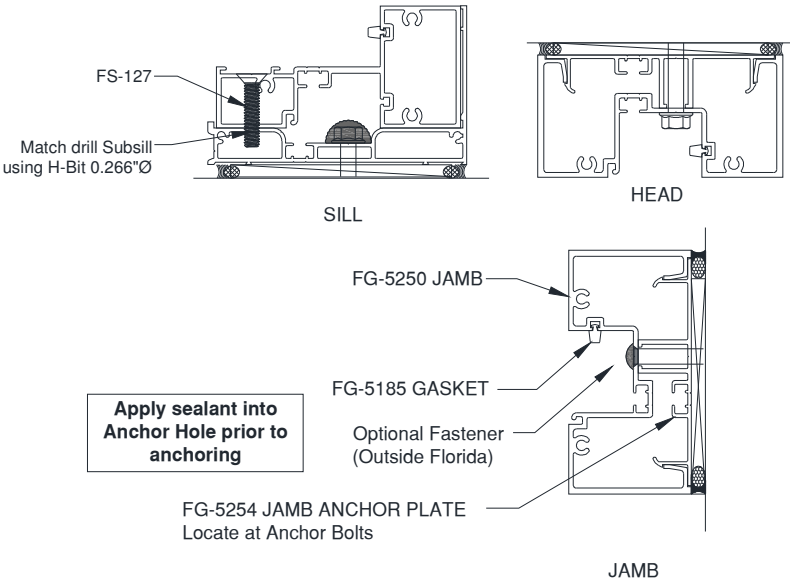

Figure 14: Sealant Application

Copyright © 2020 Oldcastle BuildingEnvelope®
All rights reserved.

™ ® Trademarks of Oldcastle BuildingEnvelope and its affiliated companies or respective owners.

12.0 Corner Condition

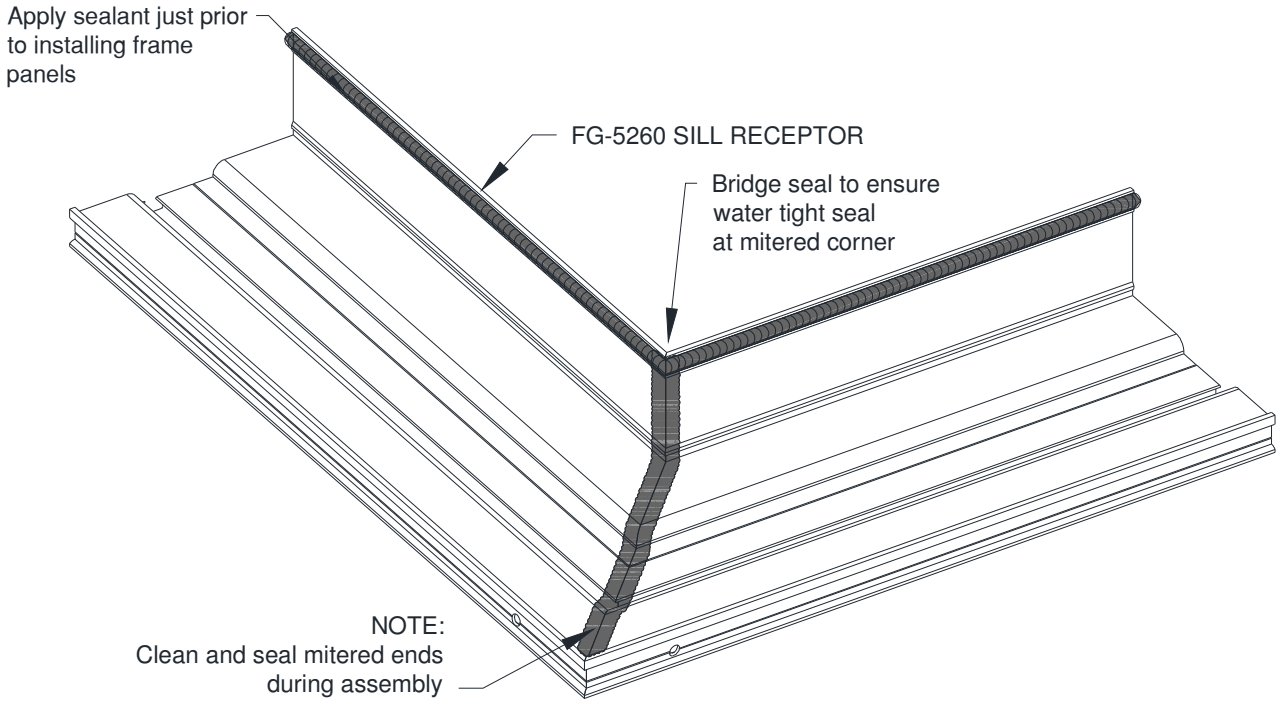

Figure 15: Sealant at Sill Receptor Corner (Wet and Dry)

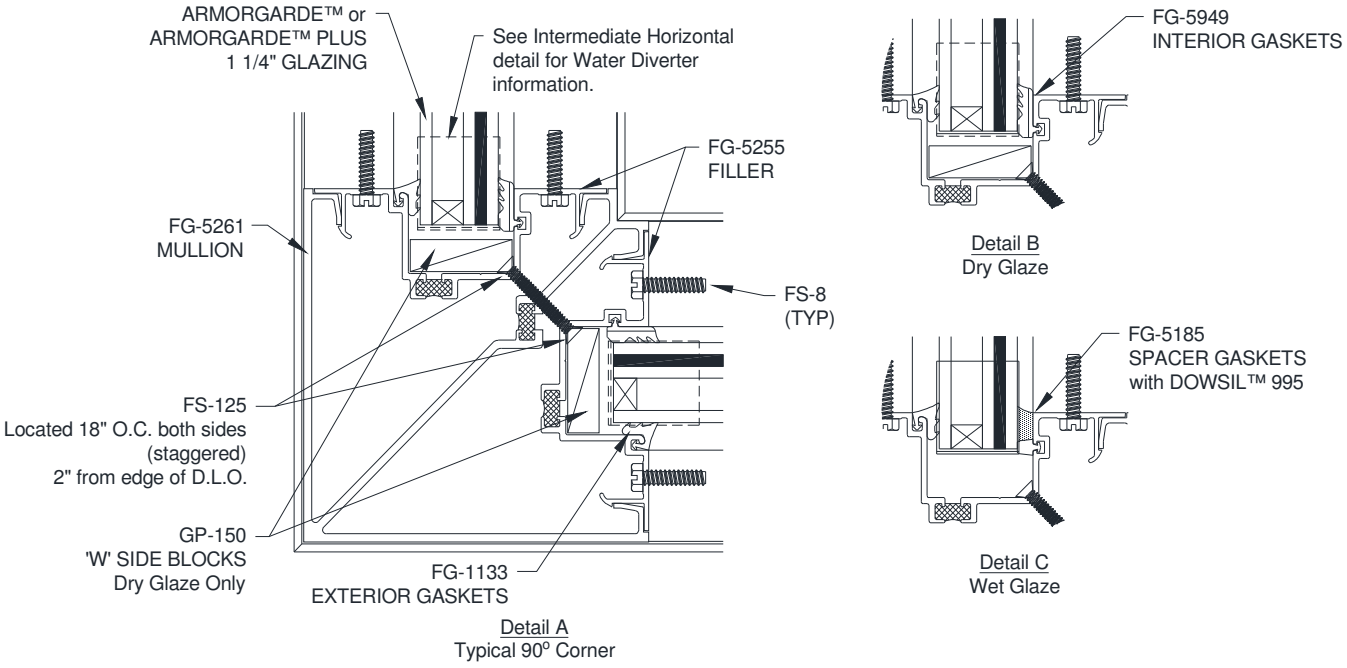

Figure 16: 90° Outside Corner

Version: 2020-0803

Copyright © 2020 Oldcastle BuildingEnvelope®
All rights reserved.

™ ® Trademarks of Oldcastle BuildingEnvelope and its affiliated companies or respective owners.

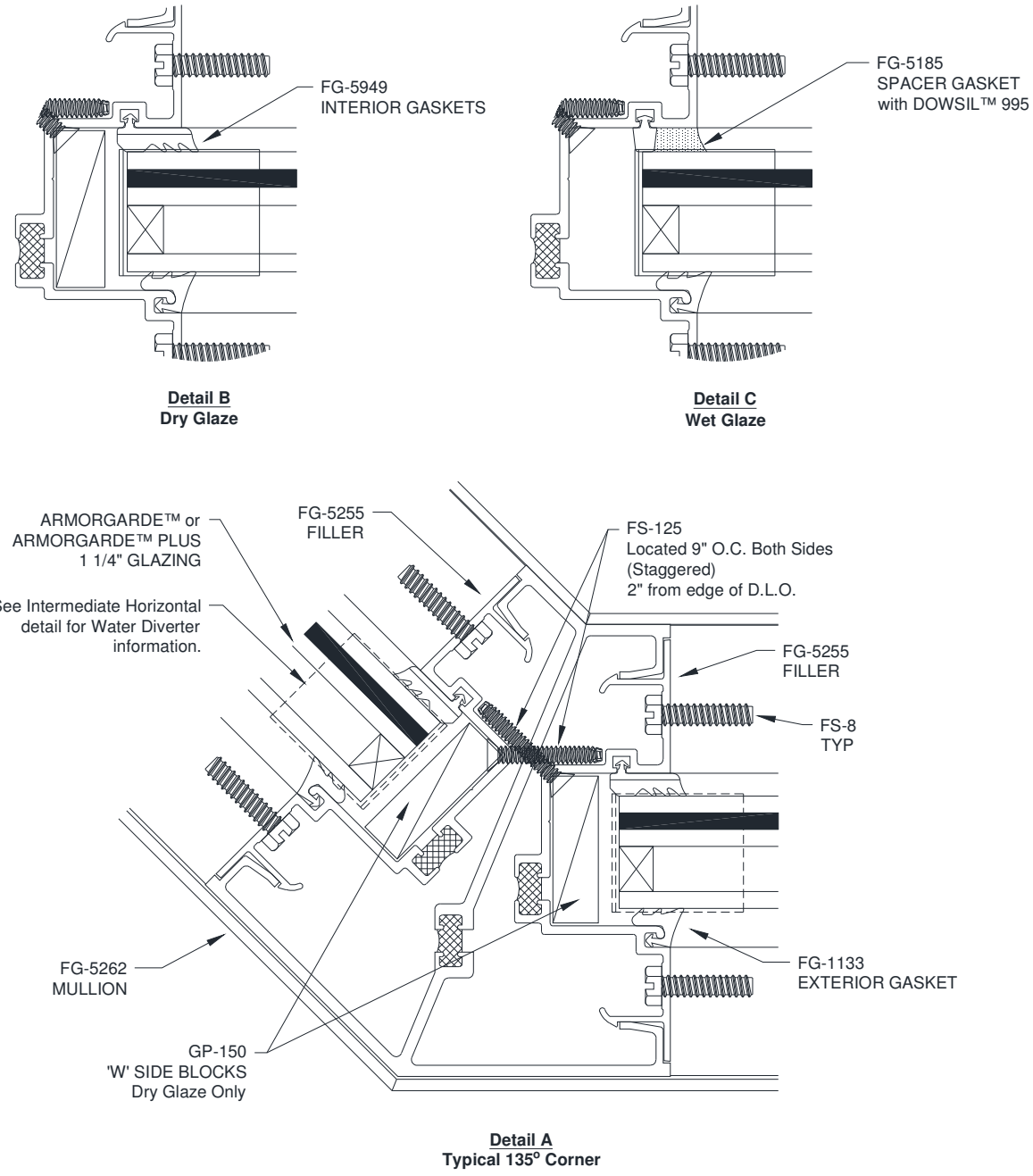

Figure 17: 135° Outside Corner

Copyright © 2020 Oldcastle BuildingEnvelope®
All rights reserved.

™ ® Trademarks of Oldcastle BuildingEnvelope and its affiliated companies or respective owners.

GLAZING

13.0 Wet Glazing

13.1 Preparing Wet Glazing Option

13.1.1 Remove all debris from glazing pockets to prevent blockage of weeps/drains.

13.1.2 Install Water Diverters after lower lite is in position. Place a bed of sealant on the end of the Horizontal and place the Water Diverter per Figure *18*.

13.1.3 Install FG-5185 Spacer Gasket around the opening. Vertical gasket runs through to Water Diverter. Reference *Figure 18* for Spacer Gasket corner detail.

13.1.4 Install FG-5186 Setting Block at quarter points of each lite or as specified by glass manufacturer.

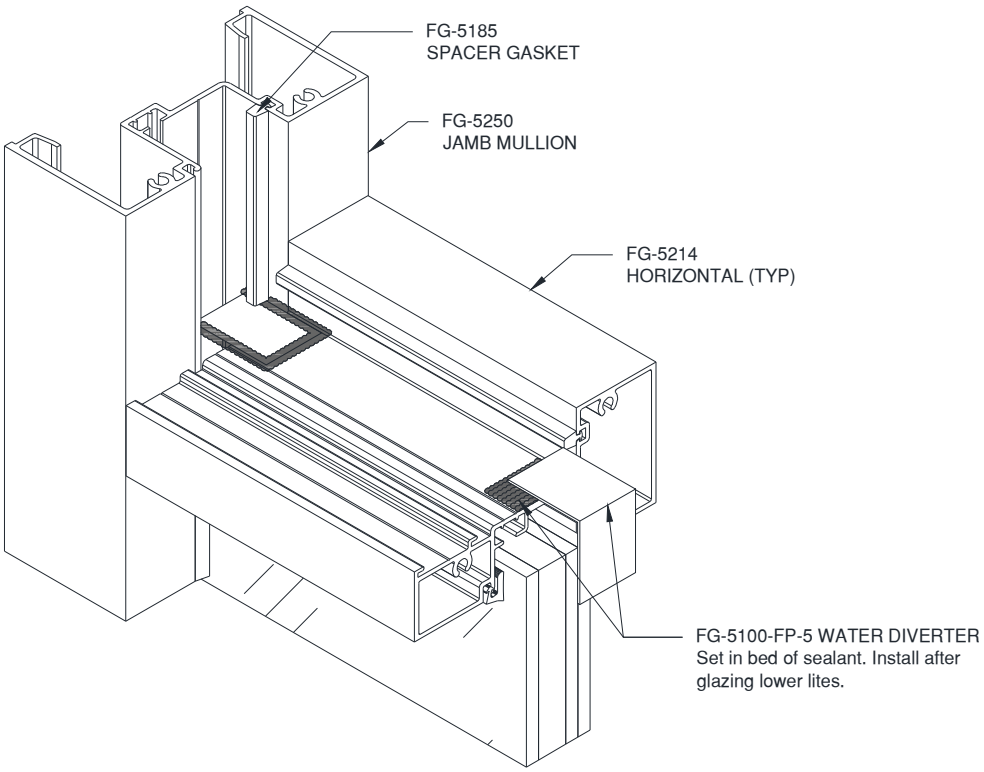

Figure 18: Installation of Water Diverters

13.2 Setting Glass and Exterior Gasket

Note: Glaze from bottom up

13.2.1 Install 1-1/4" thick ArmorGarde™ or ArmorGarde™ Plus Security Glazing into framing, pushing in to the deep pocket first. After centering in the D.L.O., pull glass up and position the Setting Block.

13.2.2 Install exterior FG-5258 Glass Stops.

13.2.3 Cut Gaskets a minimum of 1/4" per foot longer than the D.L.O., to provide adequate compression, and miter the ends of the gaskets at a 20° angle, as shown in *Figure 19, Detail A*.

13.2.4 Install exterior FG-1133 glazing gaskets starting at the middle of the glass.

13.2.5 After gaskets are pressed into place, pull gasket from pocket at corners as shown in *Figure 20 Detail B*. Clean glass and gaskets a minimum of 2" from each end with isopropyl alcohol.

13.2.6 Apply sealant and push Gasket into reglet, compressing from the corner first, *Figure 20 Detail C*. Clean squeeze out immediately.

Copyright © 2020 Oldcastle BuildingEnvelope®
All rights reserved.

™ ® Trademarks of Oldcastle BuildingEnvelope and its affiliated companies or respective owners.

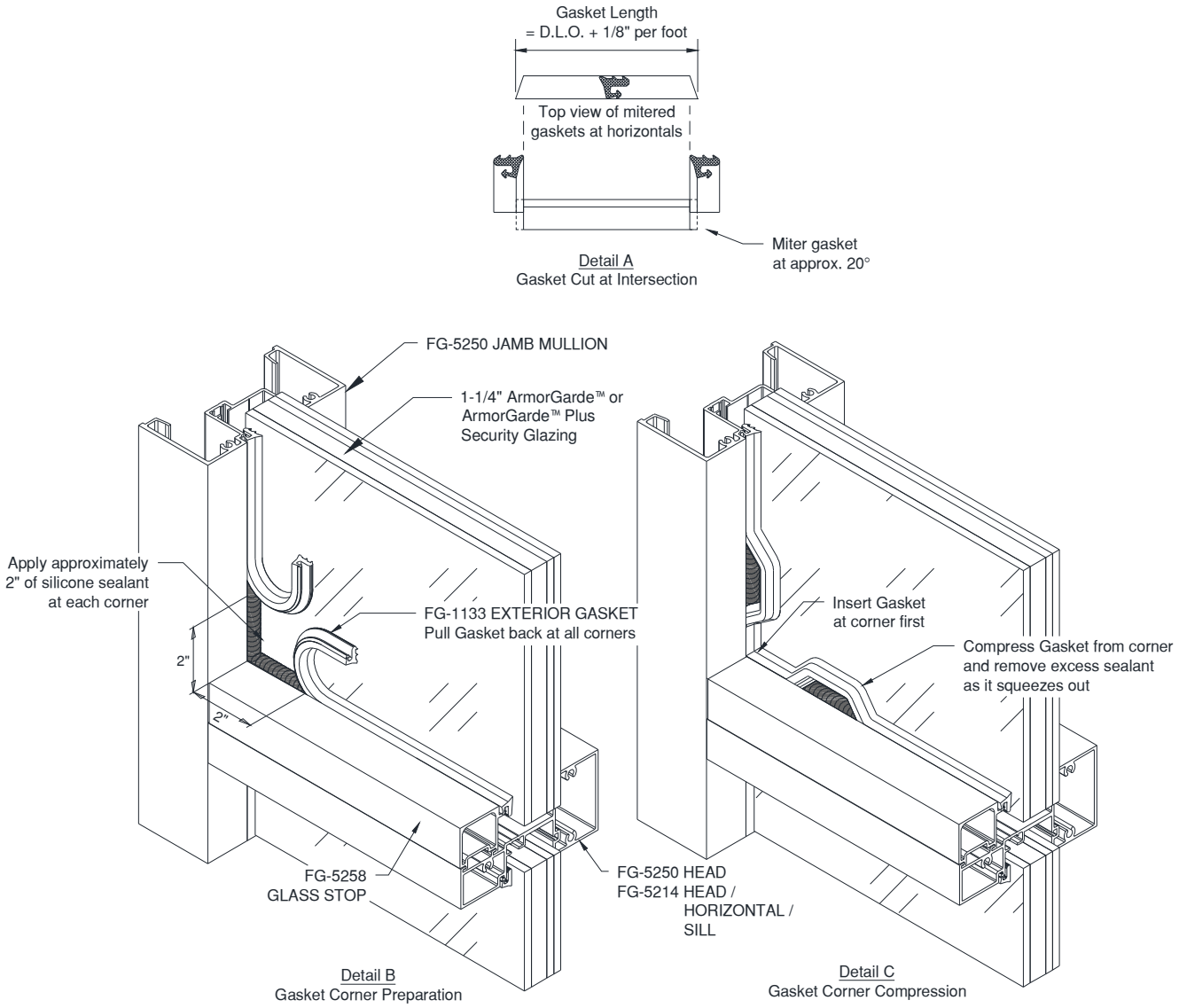

Figure 19: Exterior Gasket Installation

13.3 Application of Interior Structural Sealant

13.3.1 Verify the glass bite is 9/16". Remove Exterior Gasket and return to the steps in *Section 13.2 Setting Glass and Exterior* Gasket and adjust to attain proper glass bite.

13.3.2 Mask off glass and aluminum with 1" wide (minimum) low adhesion masking tape. Reference *Figure 20* for masking tape application location. Working a single D.L.O. at a time, fill cavity around full perimeter of D.L.O. with DOWSIL™ 995 Silicone Structural Sealant, as shown in *Figure 20 Detail A*; care should be taken not to leave any voids and eliminate air bubbles in sealant. Immediately tool, creating a finished joint with a beveled/curved joint surface, *Figure 20 Detail B*.

13.3.3 Remove masking tape before sealant skins, taking care not to damage tooled sealant.

Version: 2020-0803

Copyright © 2020 Oldcastle BuildingEnvelope®
All rights reserved.

™ ® Trademarks of Oldcastle BuildingEnvelope and its affiliated companies or respective owners.

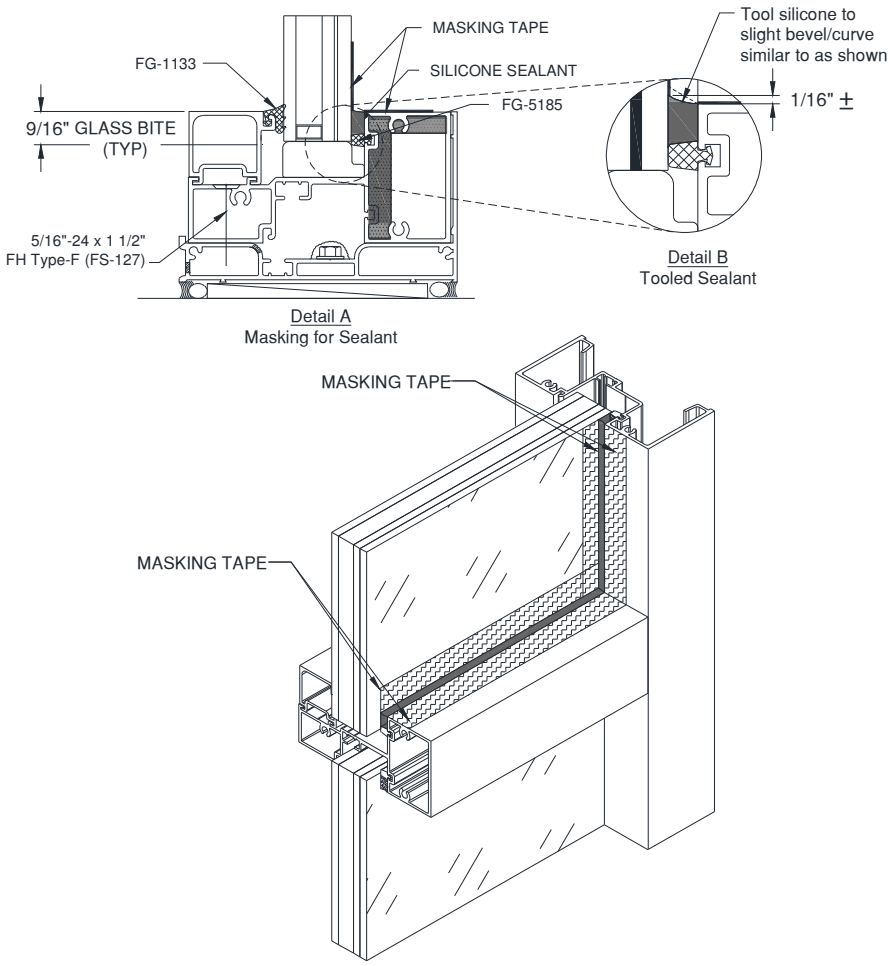

Figure 20: Interior Sealant Application

14.0 Dry Glazing

14.1 Preparing Gasket and Installing Interior Gasket

14.1.1 Remove Gasket from roll and allow to relax in a protected location overnight. Cut Gasket per material cut list on page 8.
Note: When installed, vertical Gasket runs through while horizontal Gasket butts into the vertical Gasket. See
Figure 21 Detail B for representation of the Gasket corner.

14.1.2 Remove all debris from glazing pockets to prevent blockage of weeps/drains.

14.1.3 Install Water Diverters after lower lite is in position. Place a bed of sealant on the end of the Horizontal and place the Water Diverter per

14.1.4 *Figure 21*.

14.1.5 Install interior Gasket prior to glazing, starting gaskets at the middle of the glass and working out toward the corners.

14.1.6 After Gasket is installed, pull Gasket from pocket at corner junctions a minimum of 2". Clean Gasket and framing surfaces with isopropyl alcohol.

14.1.7 Apply sealant in the raceway per the locations indicated in

14.1.8 *Figure 21*, *Detail A*, and set the vertical Gasket first. Apply sealant at the connection point of the horizontal Gasket and the vertical Gasket before setting horizontal Gasket. Clean any squeeze out immediately.

14.1.9 Install FG-5186 Setting Blocks per shop drawings; depending on the glass size, Setting Blocks will be located at either 1/4 points or 1/8 points.

Copyright © 2020 Oldcastle BuildingEnvelope®
All rights reserved.

™ ® Trademarks of Oldcastle BuildingEnvelope and its affiliated companies or respective owners.

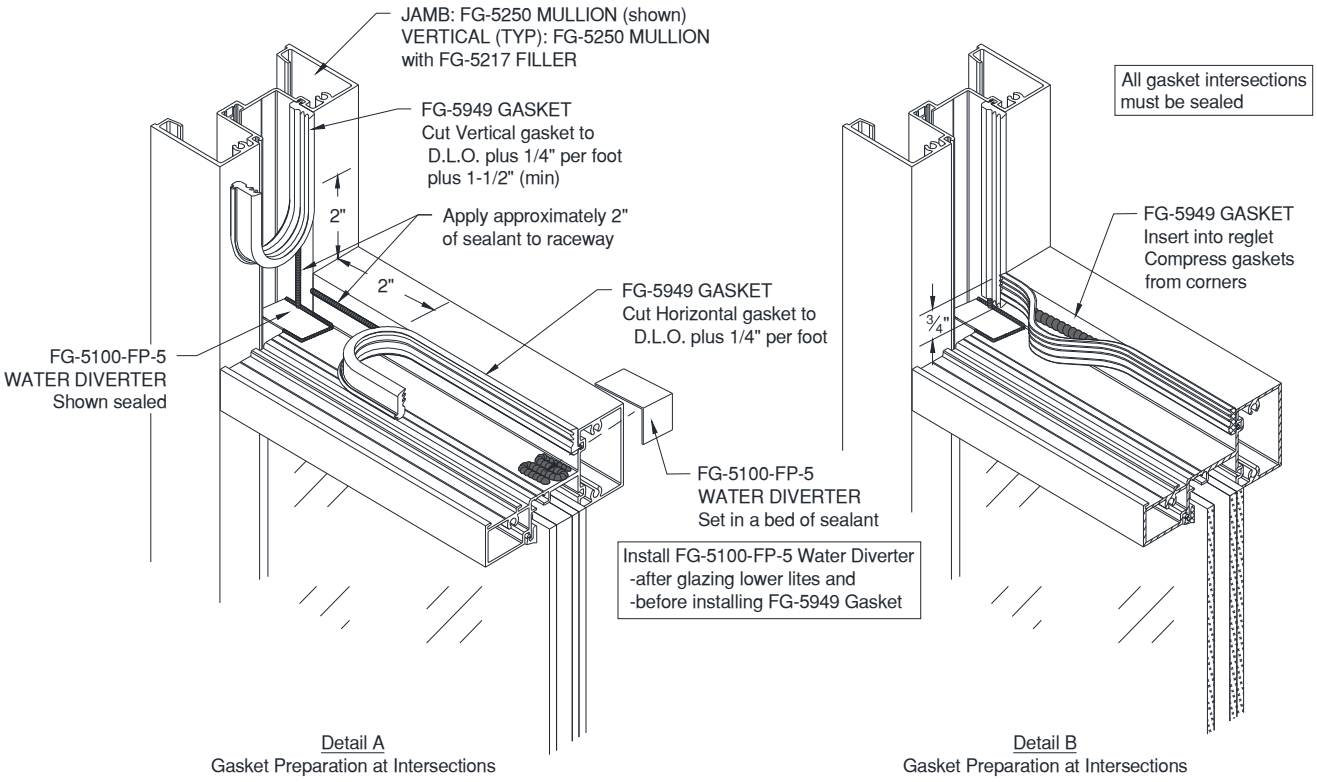

Figure 21: Dry Gasket Installation

14.2 Setting Glass and Interior Gasket

Note: Glaze from bottom up. Reference Figure 19 (page 20)

14.2.1 Install 1-1/4" thick ArmorGarde™ or ArmorGarde™ Plus Security Glazing into framing, pushing in to the deep pocket first. After centering in the D.L.O., pull glass up and position the Setting Block.

14.2.2 Install exterior FG-5258 Glass Stops.

14.2.3 Cut Gaskets a minimum of 1/4" per foot longer than the D.L.O., to provide adequate compression, and miter the ends of the gaskets at a 20° angle, as shown in *Figure 19, Detail A*.

14.2.4 Install exterior FG-1133 glazing gaskets starting at the middle of the glass.

14.2.5 After gaskets are pressed into place, pull gasket from pocket at corners as shown in *Figure 20 Detail B*. Clean glass and gaskets a minimum of 2" from each end with isopropyl alcohol.

14.2.6 Apply sealant and push Gasket into reglet, compressing from the corner first, *Figure 20 Detail C*. Clean squeeze out immediately.

Version: 2020-0803

Copyright © 2020 Oldcastle BuildingEnvelope®
All rights reserved.

™ ® Trademarks of Oldcastle BuildingEnvelope and its affiliated companies or respective owners.

PARTS LIST

Parts not shown to scale.

FG-5214 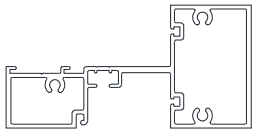	HEAD / SILL / INTERMEDIATE HORIZONTAL	FG-5258	GLASS STOP
FG-5250 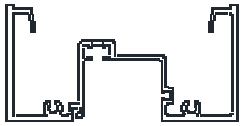	HEAD / MULLION (TYP)	FG-5217	POCKET FILLER (FOR OPEN BACK MULLIONS)
FG-5251 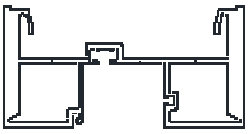	HEAVY JAMB / MULLION	FG-5254	HEAD / JAMB FILLER
FG-5256 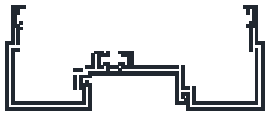	EXPANSION (MALE)	FG-5255 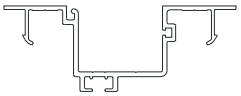	DEEP POCKET FILLER
FG-5257 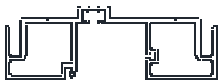	EXPANSION (FEMALE)	FG-5000-FP-14 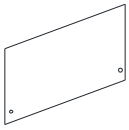	SILL RECEPTOR END DAM
FG-5260 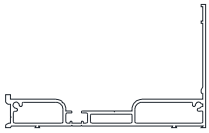	SILL RECEPTOR	FG-5100-FP-05 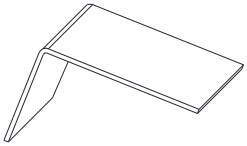	WATER DIVERTER
FG-5261 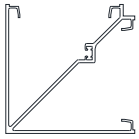	90° CORNER MULLION	FG-5186	SETTING BLOCK
FG-5262 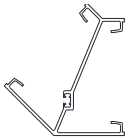	135° CORNER MULLION	GP-150	SIDE BLOCK

Copyright © 2020 Oldcastle BuildingEnvelope®
All rights reserved.

™ ® Trademarks of Oldcastle BuildingEnvelope and its affiliated companies or respective owners.

FG-1133	EXTERIOR GLAZING GASKET
FG-5185	INTERIOR SPACER GASKET *WET GLAZE ONLY*
FG-5949 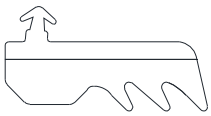	DRY GLAZE GASKET
CW-998 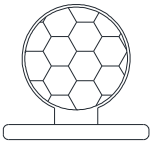	BULB GASKET
FG-5000-PP-8	STEEL REINFORCEMENT
4666 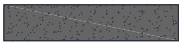	BUTYL JOINT SEALANT TAPE 1/8" x 1/2"
UW-466	SPLICE (FOR FG-5260) 10' ROLL

FS-8 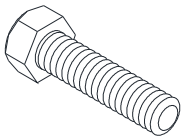	#14 x 1" HHSTS ASSEMBLY SCREW
FS-38 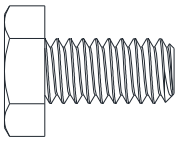	1/4"-20 x 1/2" HH Type F
FS-125 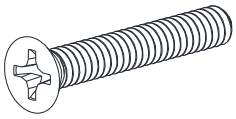	#10-24 x 1 1/4" PFH Stainless Steel
FS-127 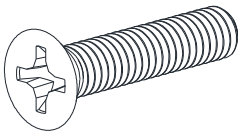	5/16"-24 x 1 1/2" FH Type F Stainless Steel Screw
FS-320 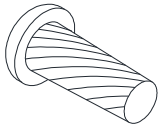	M4 X 16mm Helical Knurled Pin

Copyright © 2020 Oldcastle BuildingEnvelope®
All rights reserved.

™ ® Trademarks of Oldcastle BuildingEnvelope and its affiliated companies or respective owners.