Oldcastle BuildingEnvelope®

1-866-Oldcastle (653-2278) - www.obe.com

RELIANCE™-TC TYPE II (TC HORIZONTALS & VERTICALS) w/ ALUM. PRESSURE PLATES 2-1/2" X 7-1/4" W/ 1" TYPICAL INFILL

(Drawing numbers---i.e., H6401---used as CAD detail reference only)

Elevation

Horizontal Details

H6401	Head
H6404	Sill
H6405	Intermediate Horizontal
H6408	Roll-Over Horizontal
H6409	Roll-Under Horizontal
H6418	Horizontal at Operable Window (Pocket Frame)
H6419	Horizontal at Operable Window (Flat Frame)

Vertical Details

V6401	Jamb
V6402	Typical Vertical
V6405	Heavy Vertical
V6409	Vertical at Operable Window
V6452	SSG Vertical

Corner Details

V6415	90° Outside Corner - 2 Mullion
V6417	90° Inside Corner - 2 Mullion
V6421	90° Outside Corner
V6423	135° Outside Corner
V6427	135° Inside Corner - 2 Mullion
V6470	SSG 90° Outside Corner Option 1
V6471	SSG 90° Outside Corner Option 2

Misc. Details

H0042	Steel Anchoring
H6425	'F' & 'T' Anchoring
H6443	Mullion Splicing
H6446	Spandrel Glazing Options
H6448	Vision Glazing Options

Table of Contents

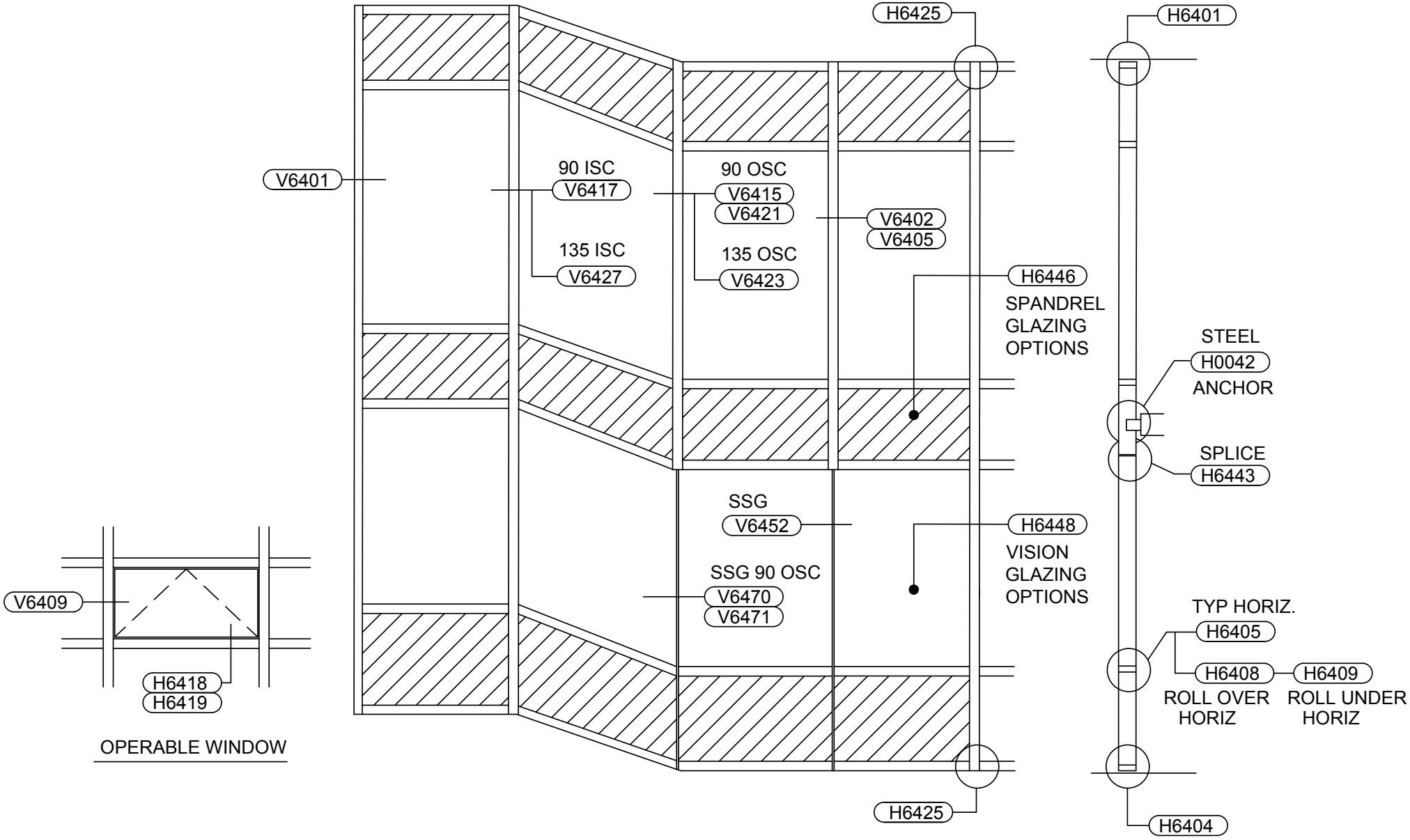

Reliance™-TC Type II - TC Horizontal & Verticals w/ Alum. Pressure Plates
2-1/2" x 7-1/4" w/ 1" Glazing - Elevation

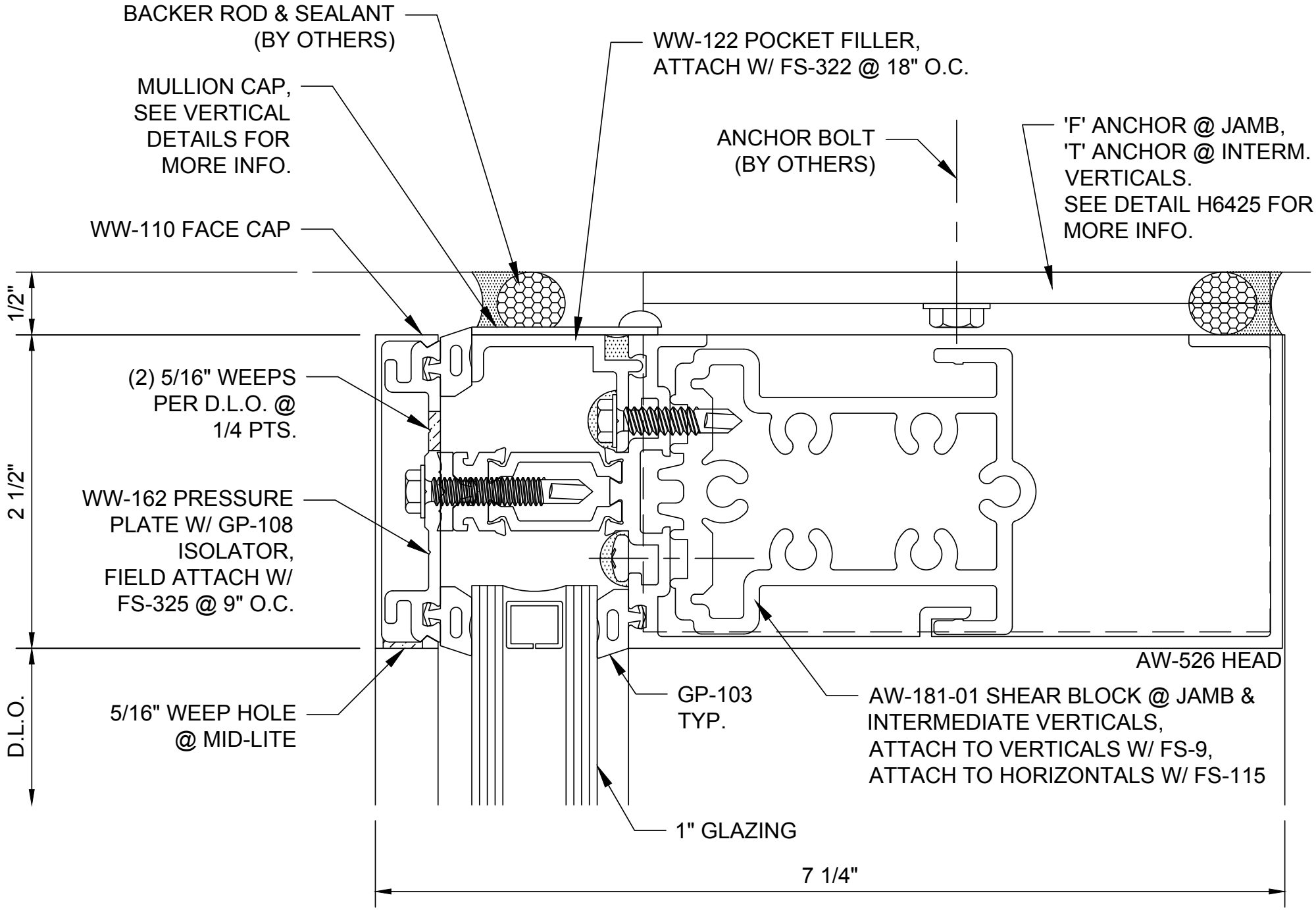

Reliance™-TC Type II
Head - H6401

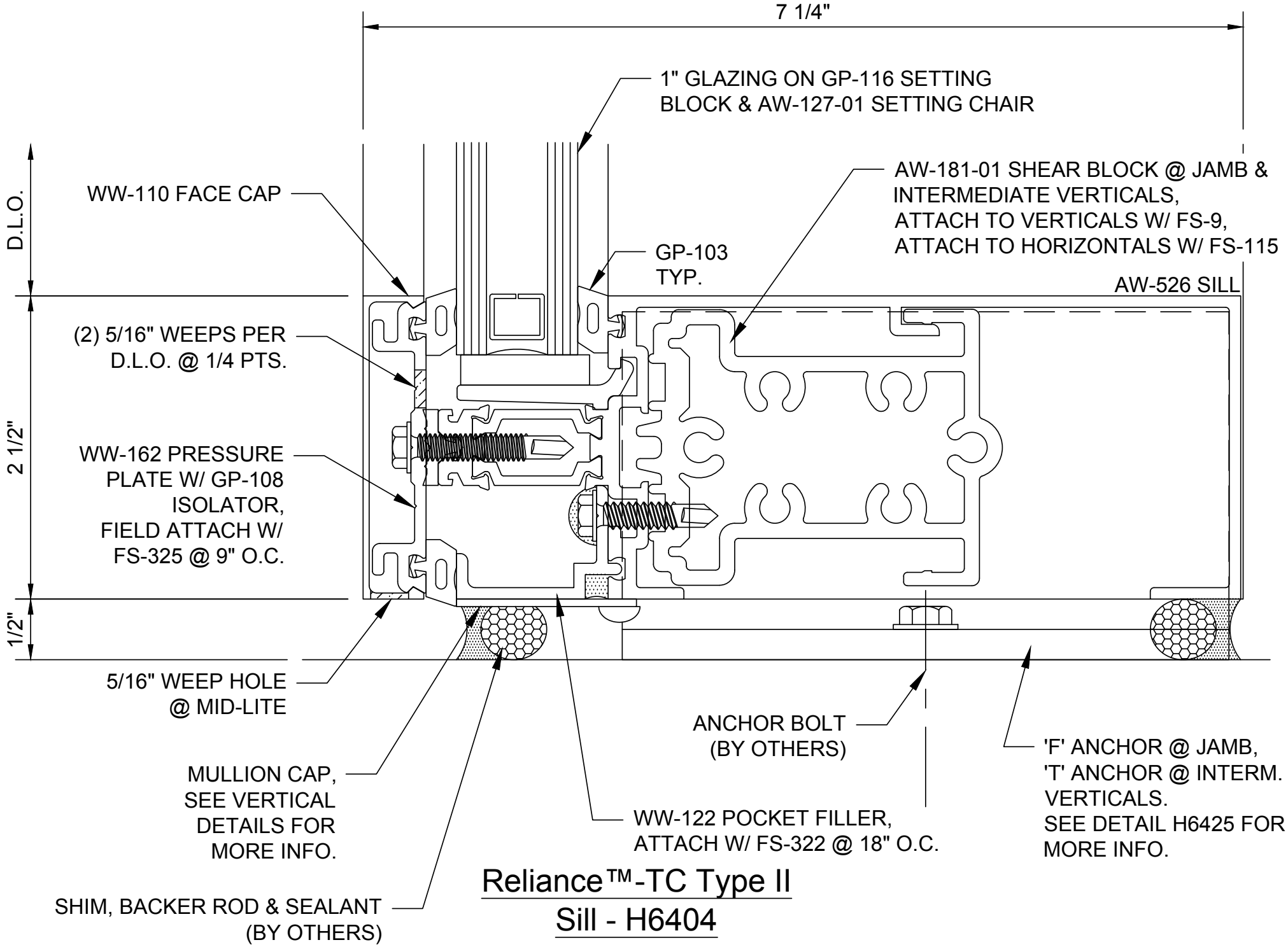

Reliance™-TC Type II
Sill - H6404

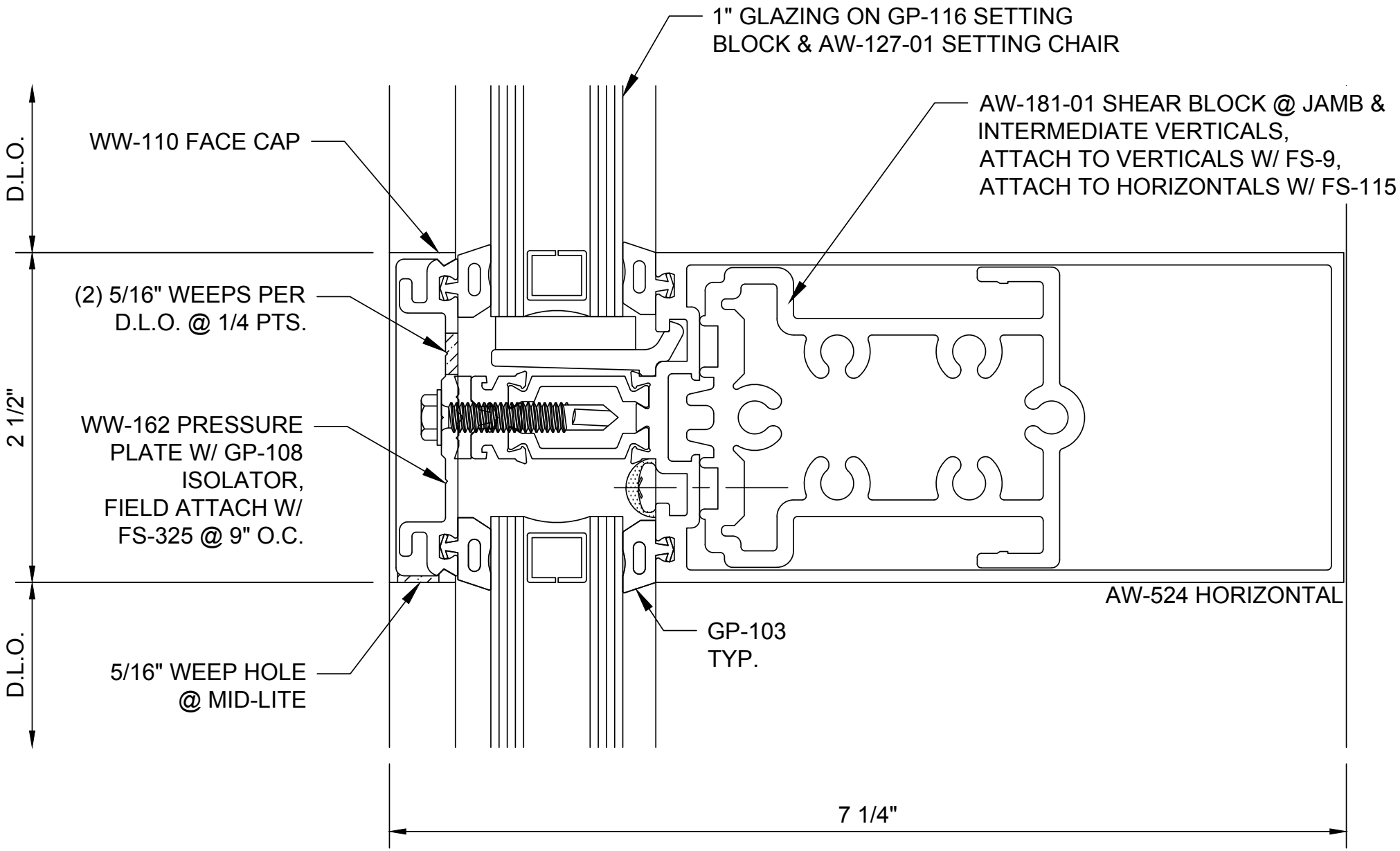

Reliance™-TC Type II
Intermediate Horizontal - H6405

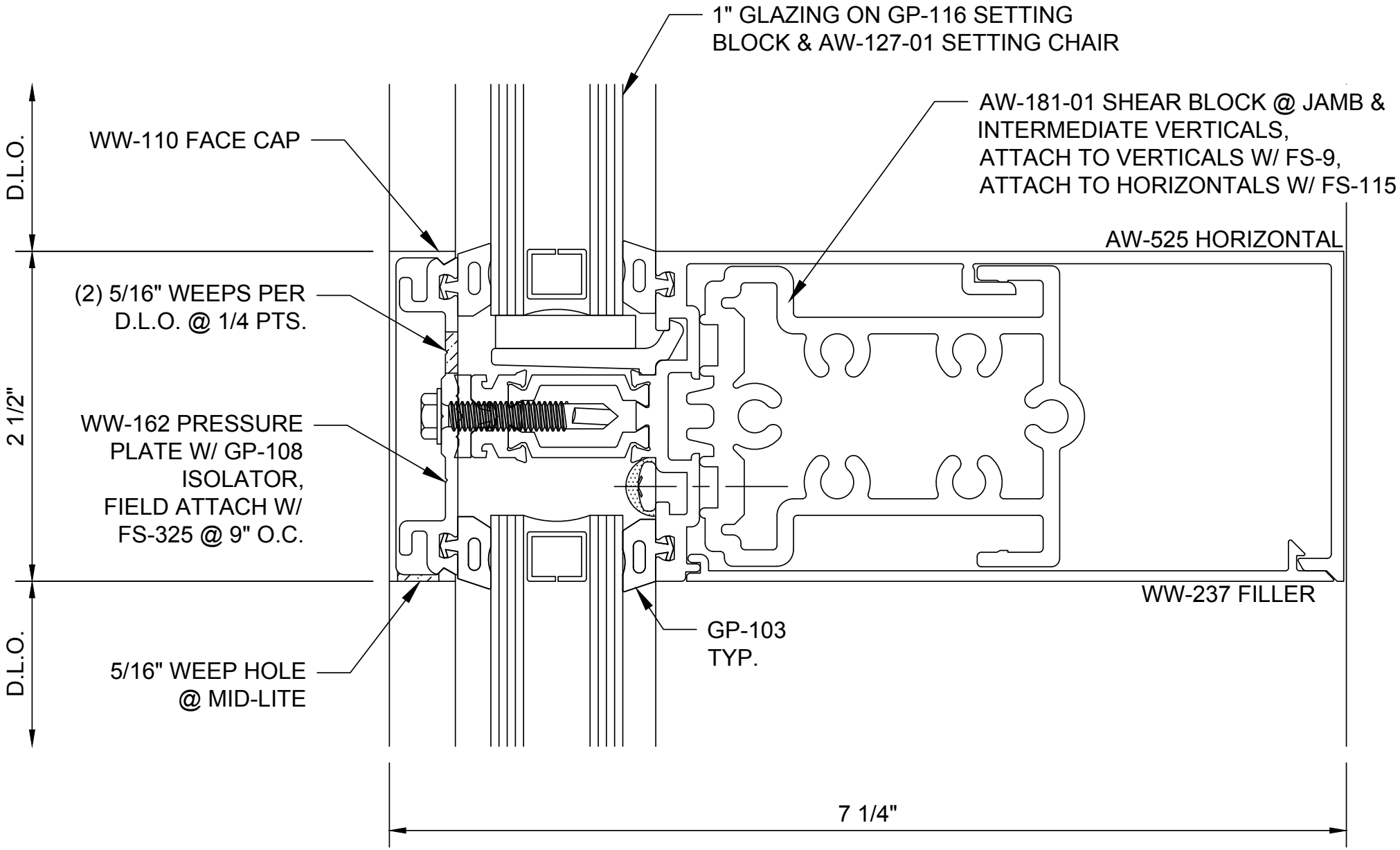

Reliance™-TC Type II
Roll-Over Horizontal - H6408

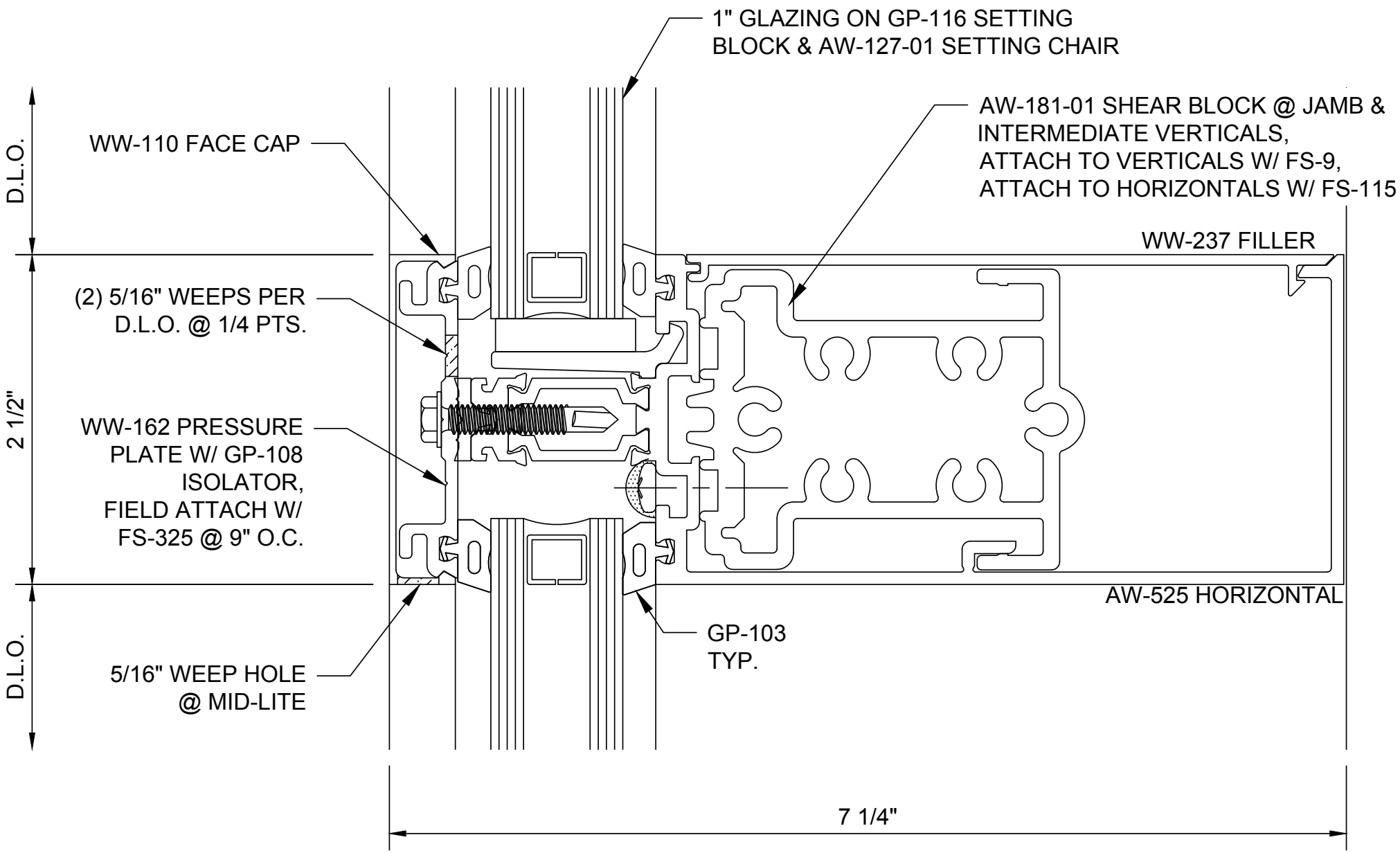

Reliance™-TC Type II
Roll-Under Horizontal - H6409

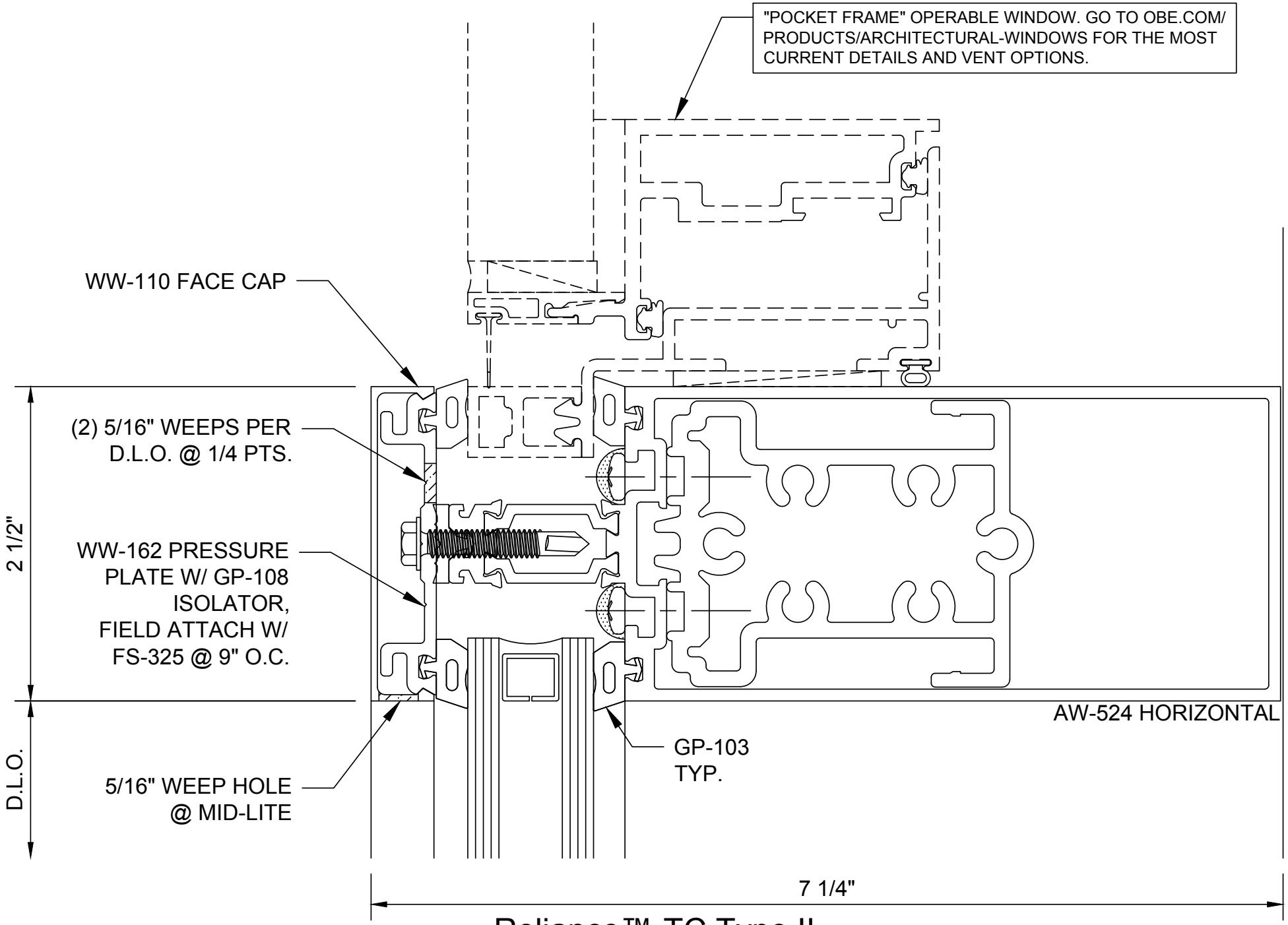

Reliance™-TC Type II
Horizontal at Operable Window - H6418

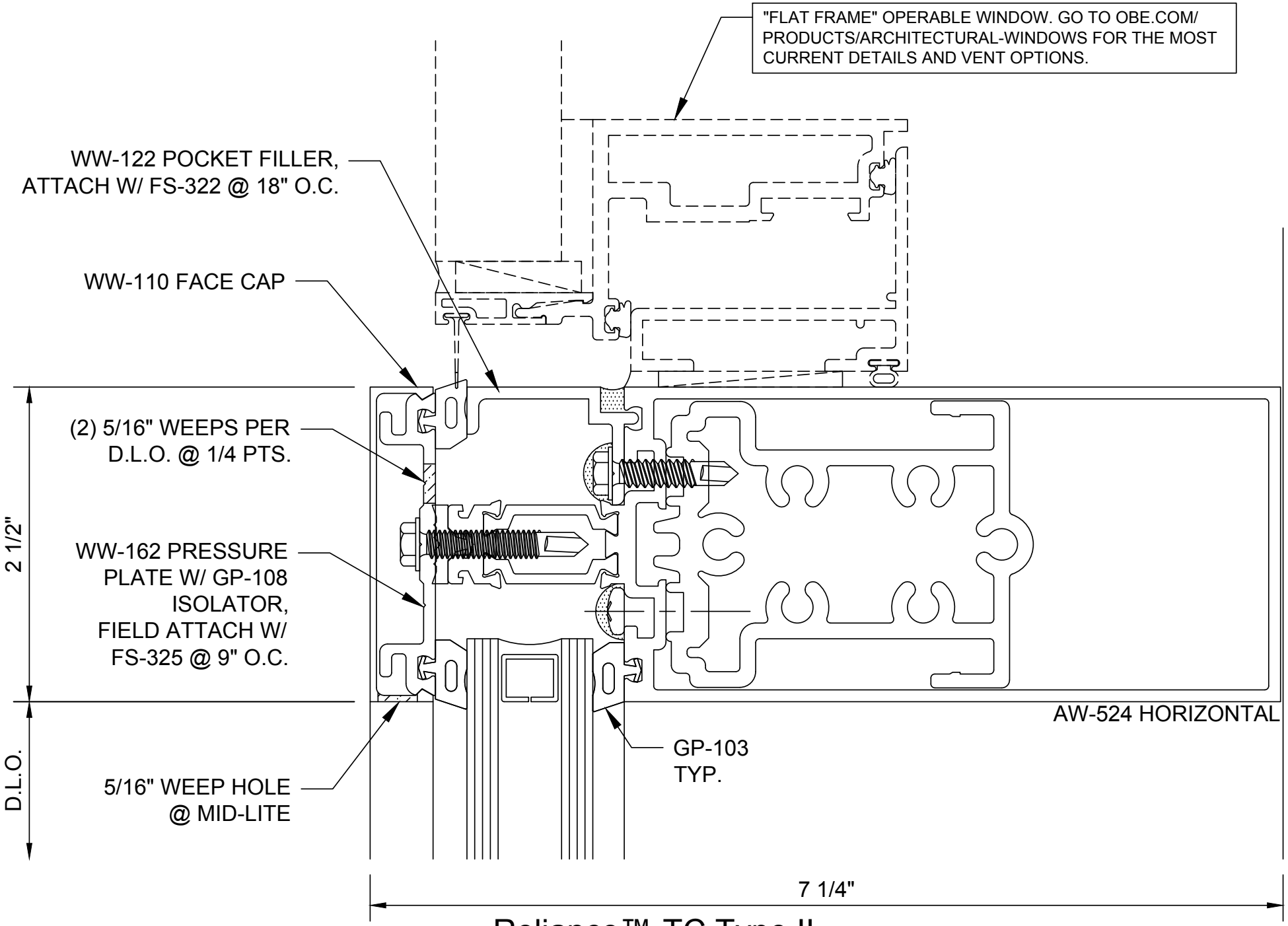

Reliance™-TC Type II
Horizontal at Operable Window - H6419

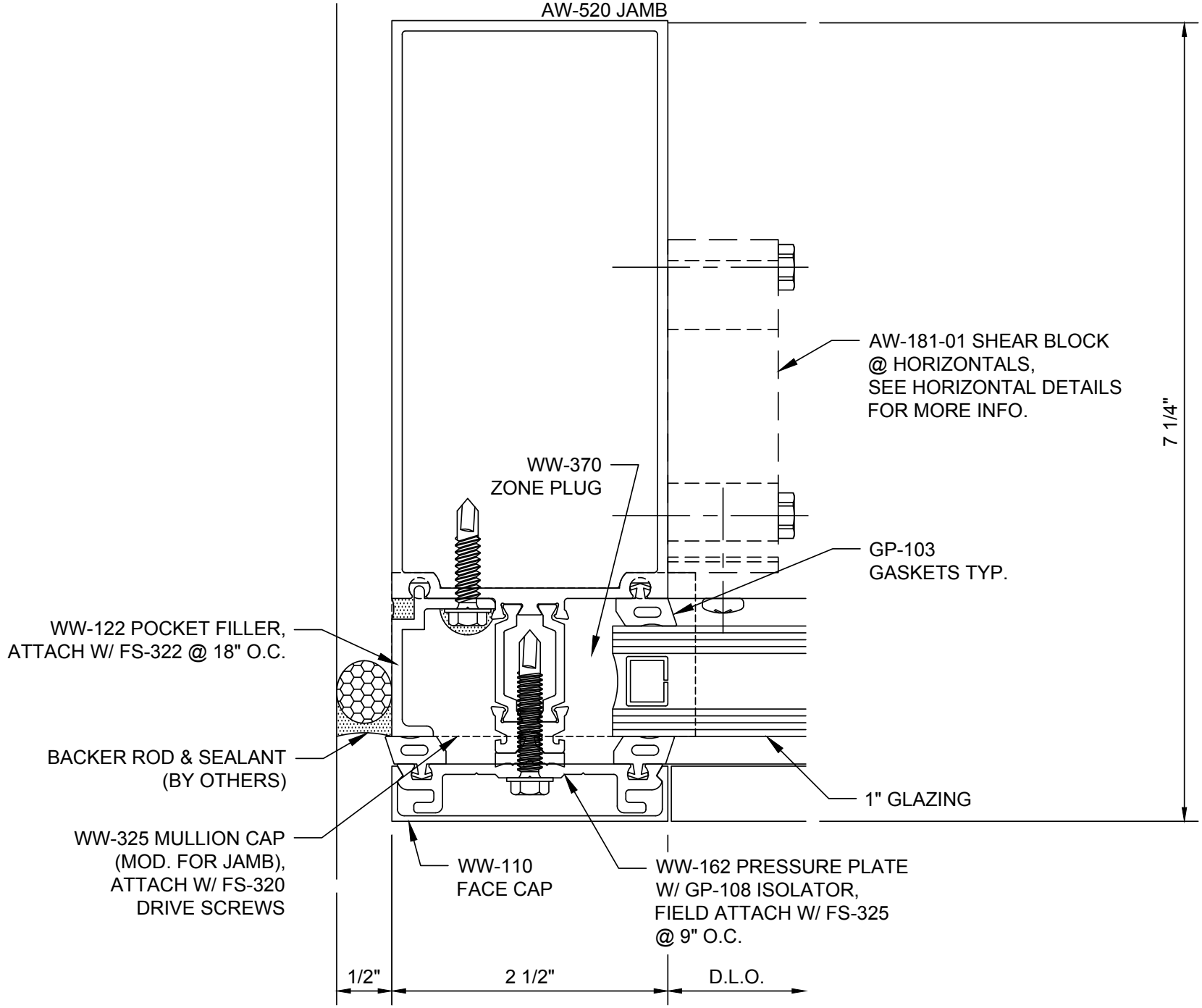

Reliance™-TC Type II
Jamb - V6401

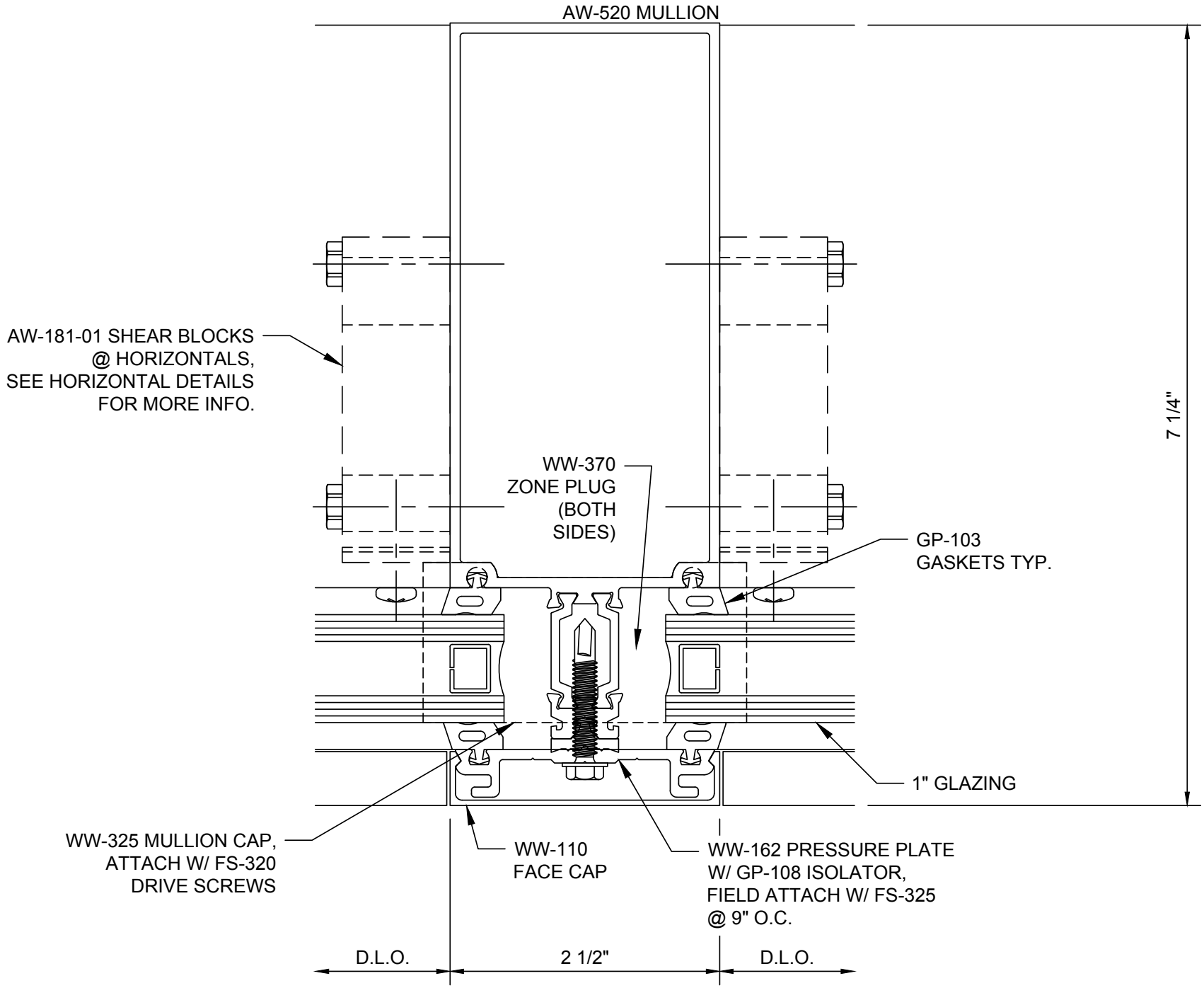

Reliance™-TC Type II
Intermediate Vertical - V6402

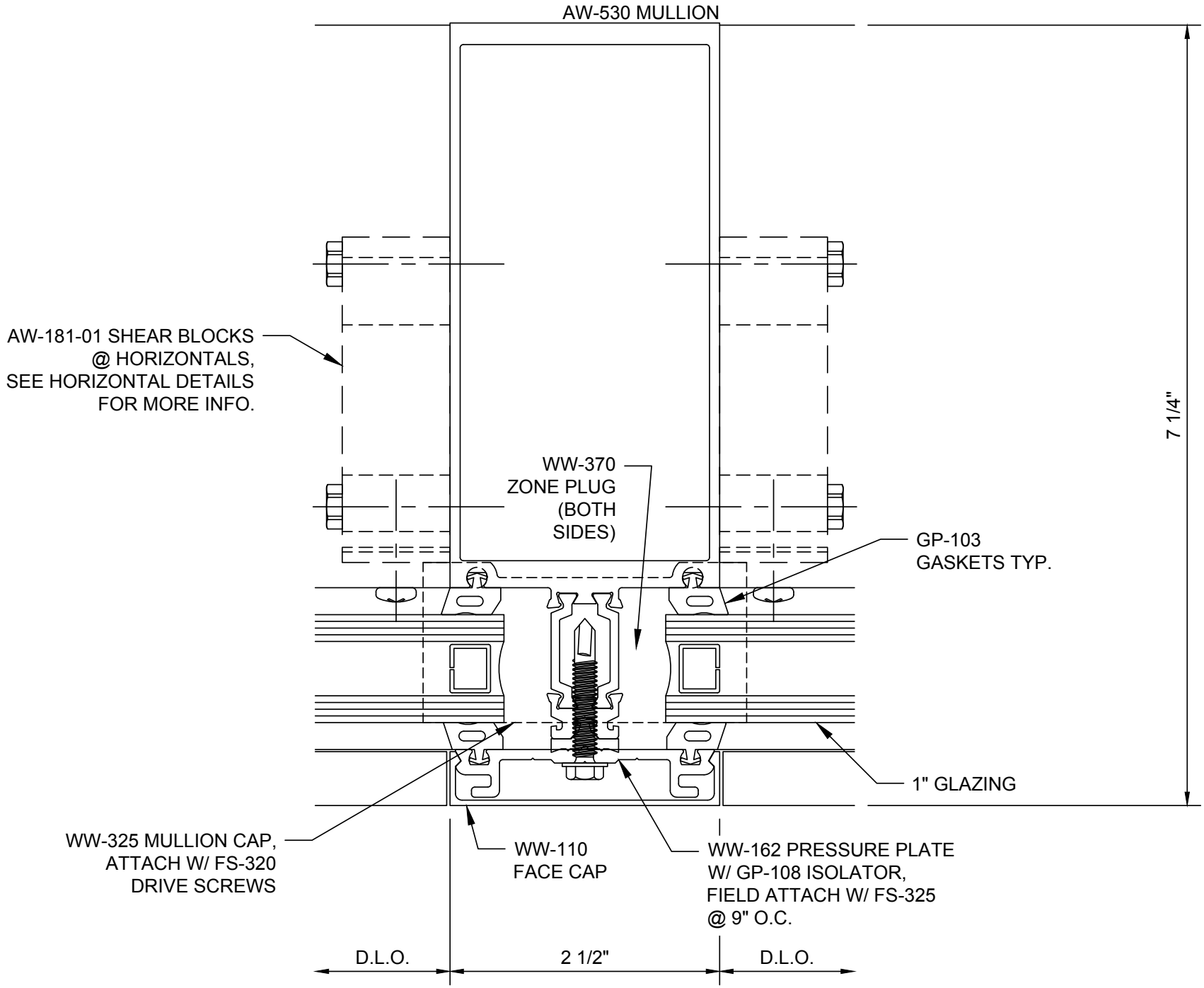

Reliance™-TC Type II
Heavy Vertical - V6405

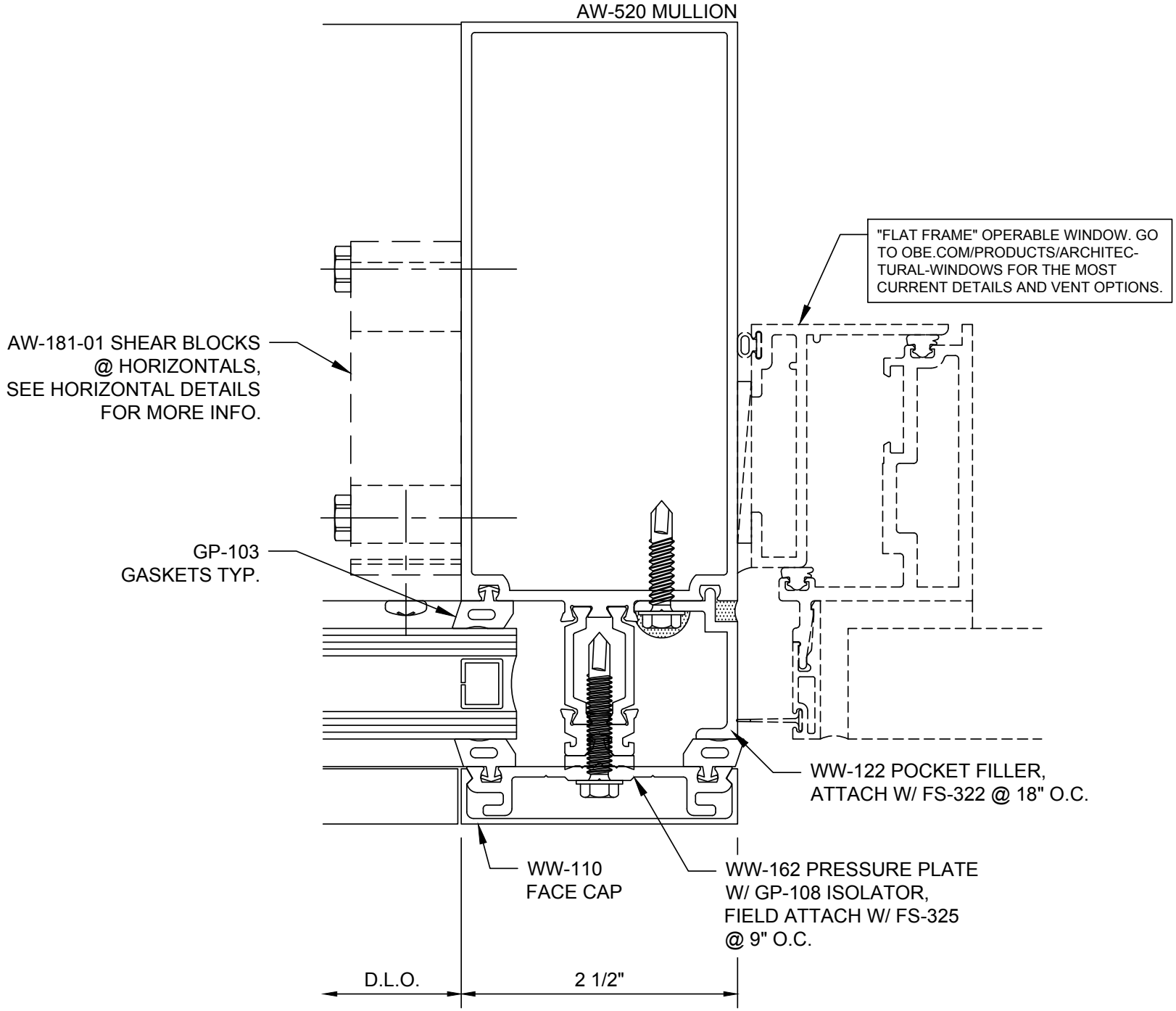

Reliance™-TC Type II
Vertical at Operable Window - V6409

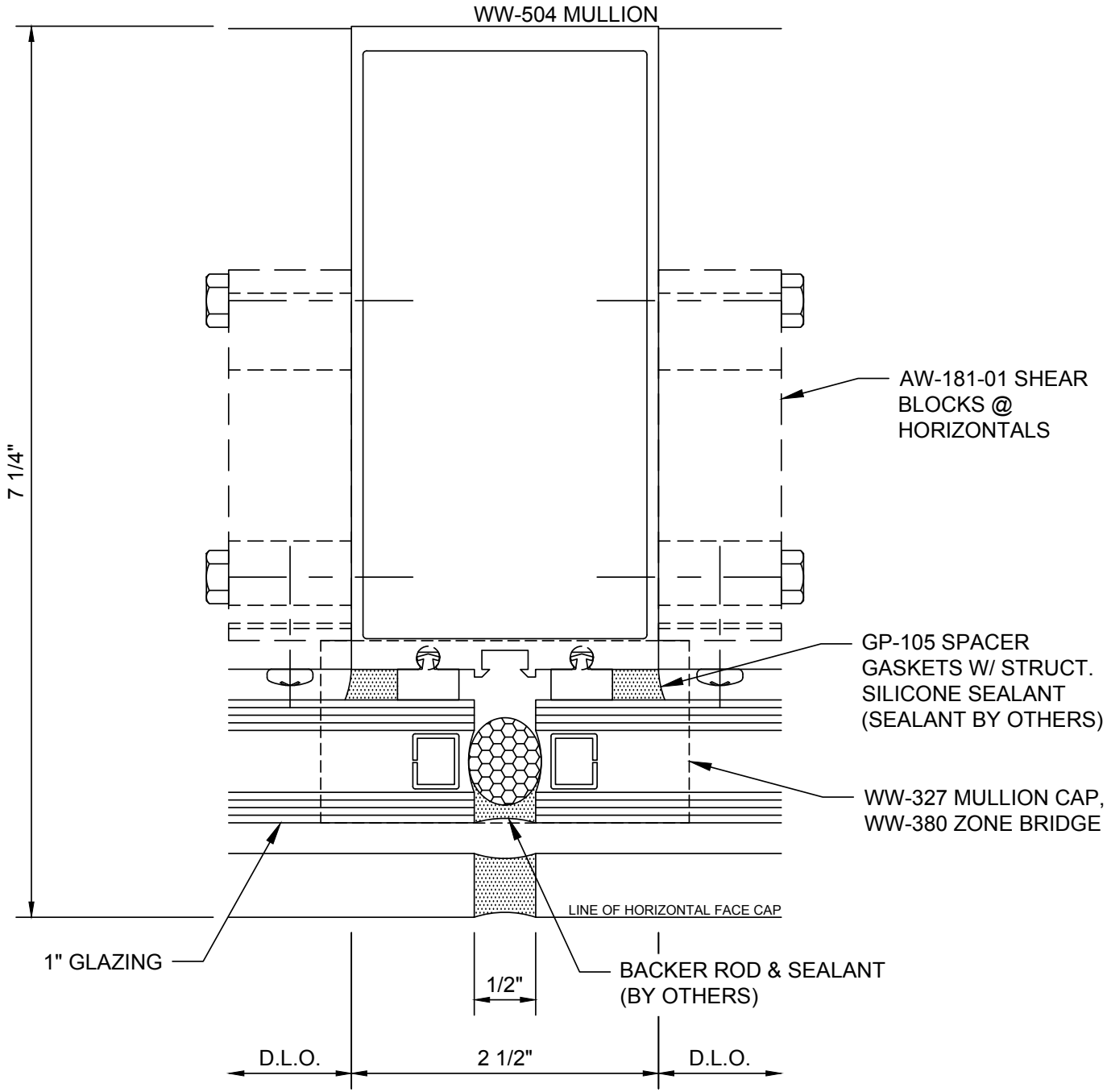

Reliance™-TC Type II
SSG Vertical - V6452

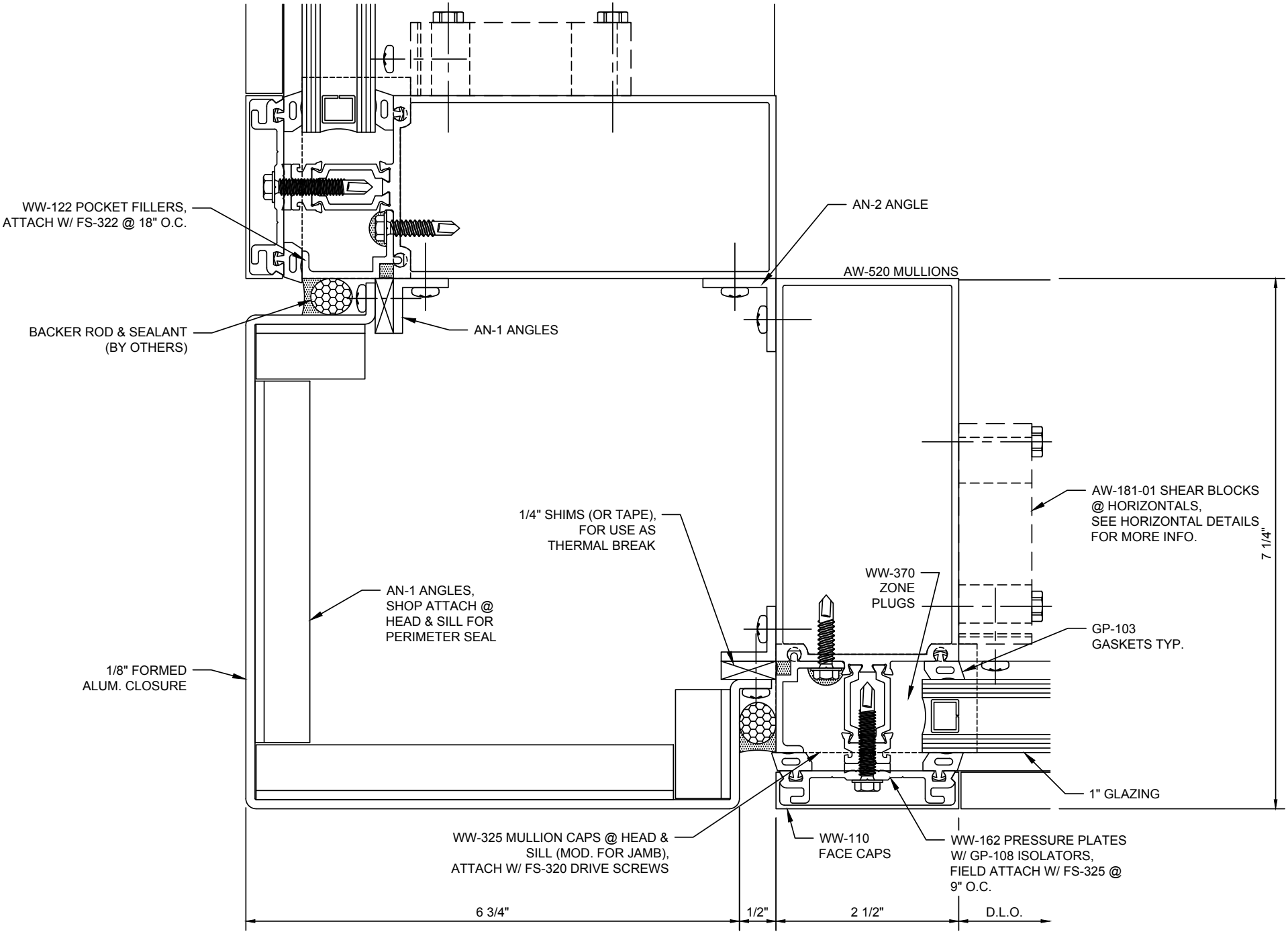

Reliance™-TC Type II
90° Outside Corner - V6415

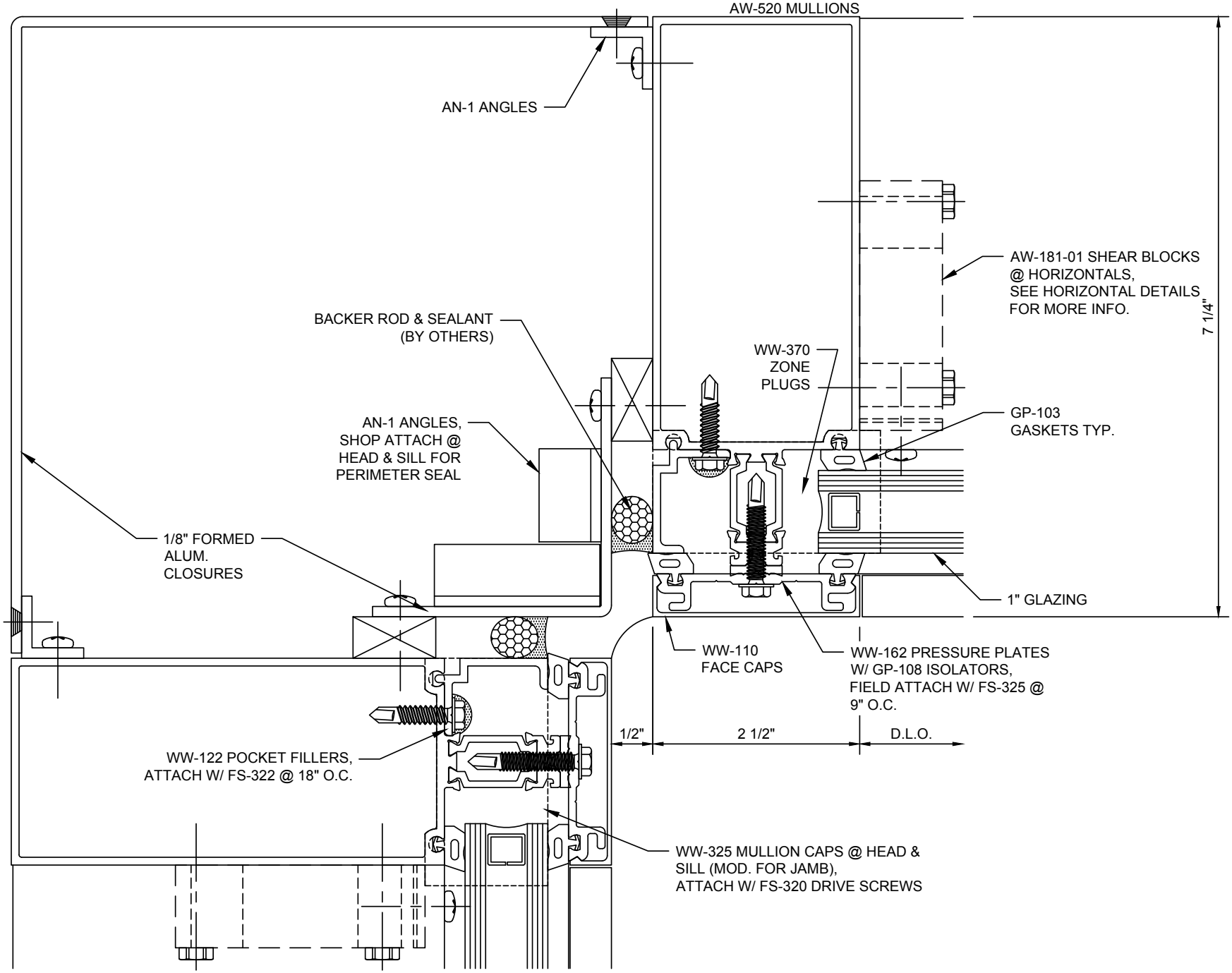

Reliance™-TC Type II
90° Inside Corner - V6417

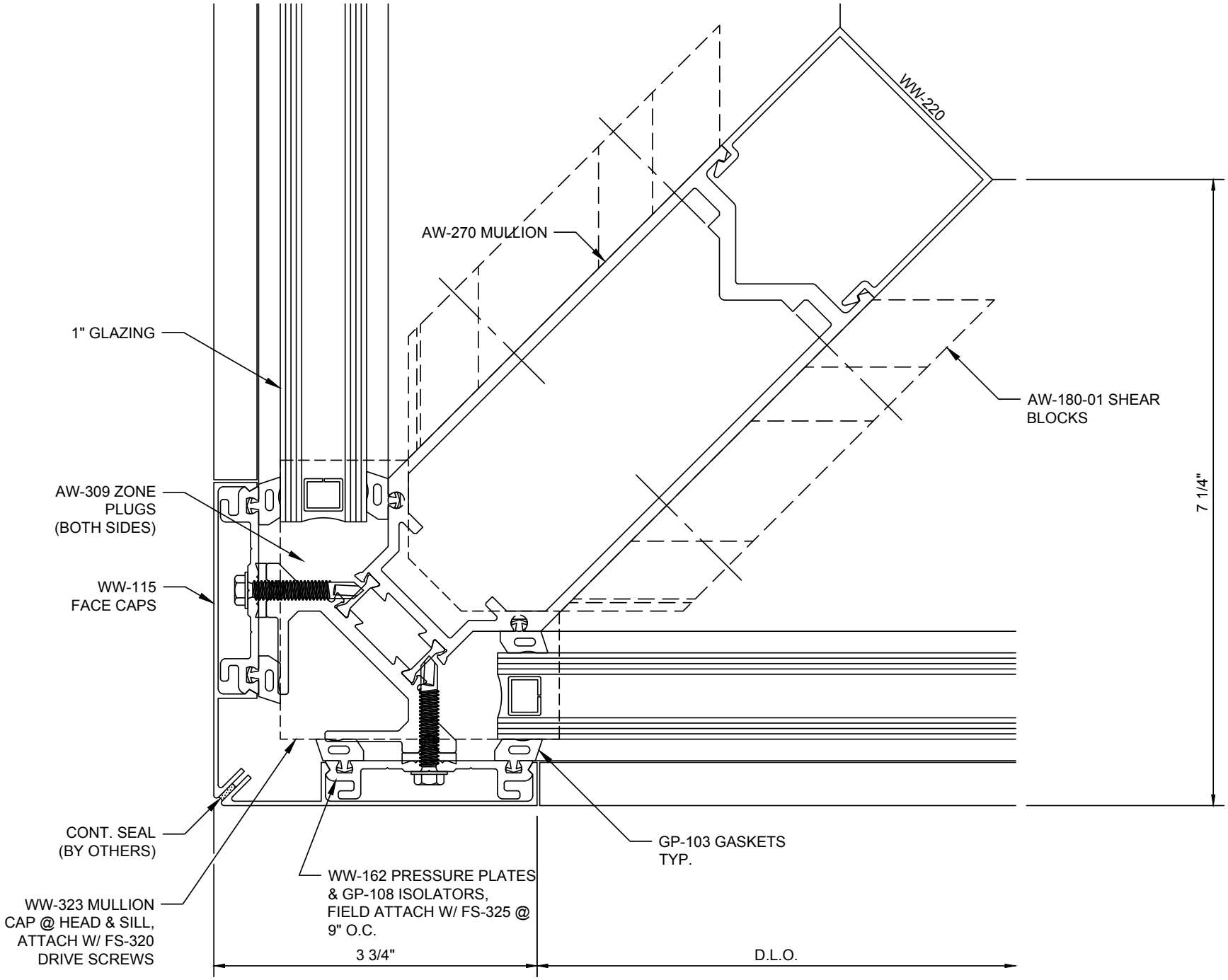

Reliance™-TC
90° Outside Corner - V6421

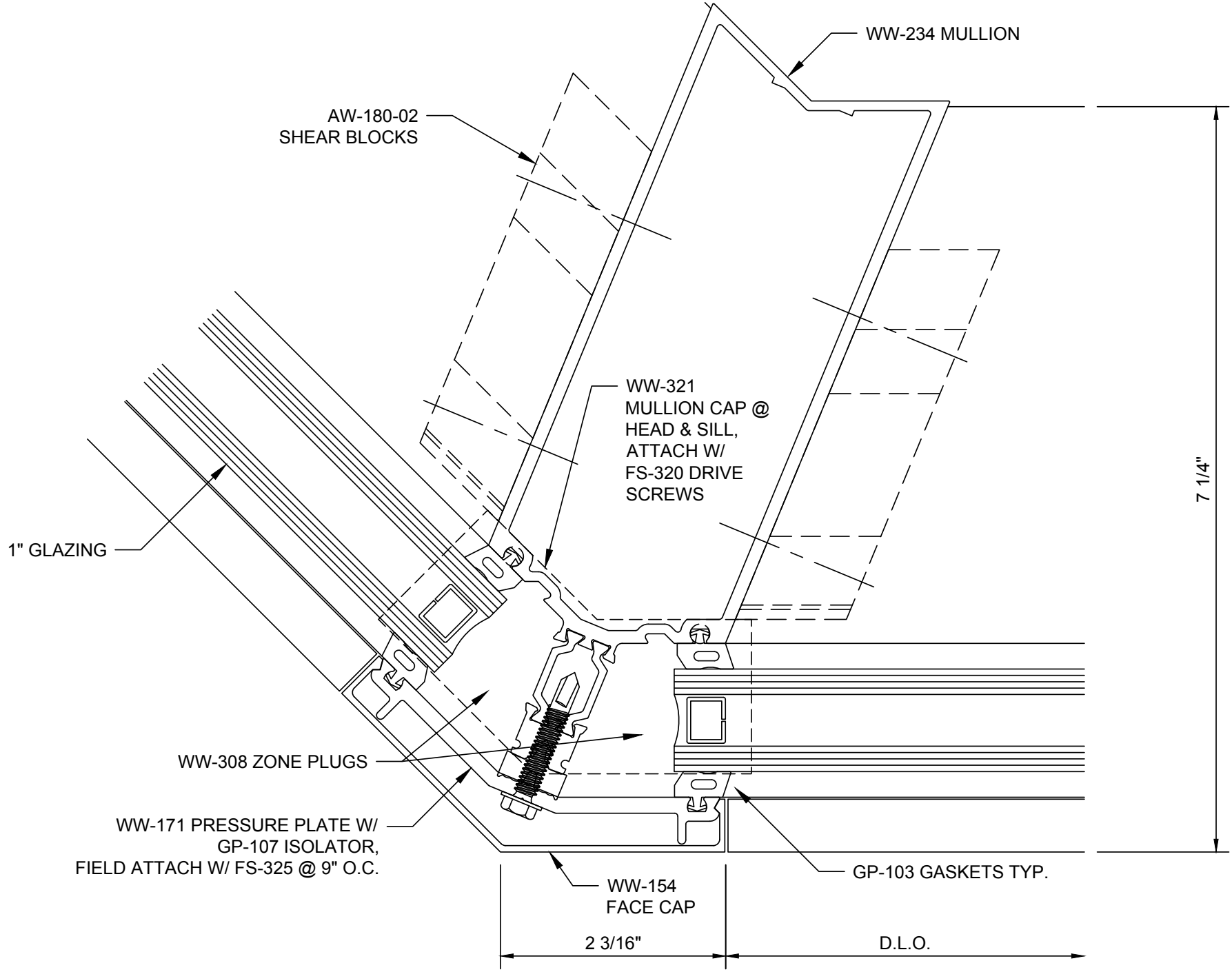

Reliance™-TC Type II
135° Outside Corner - V6423

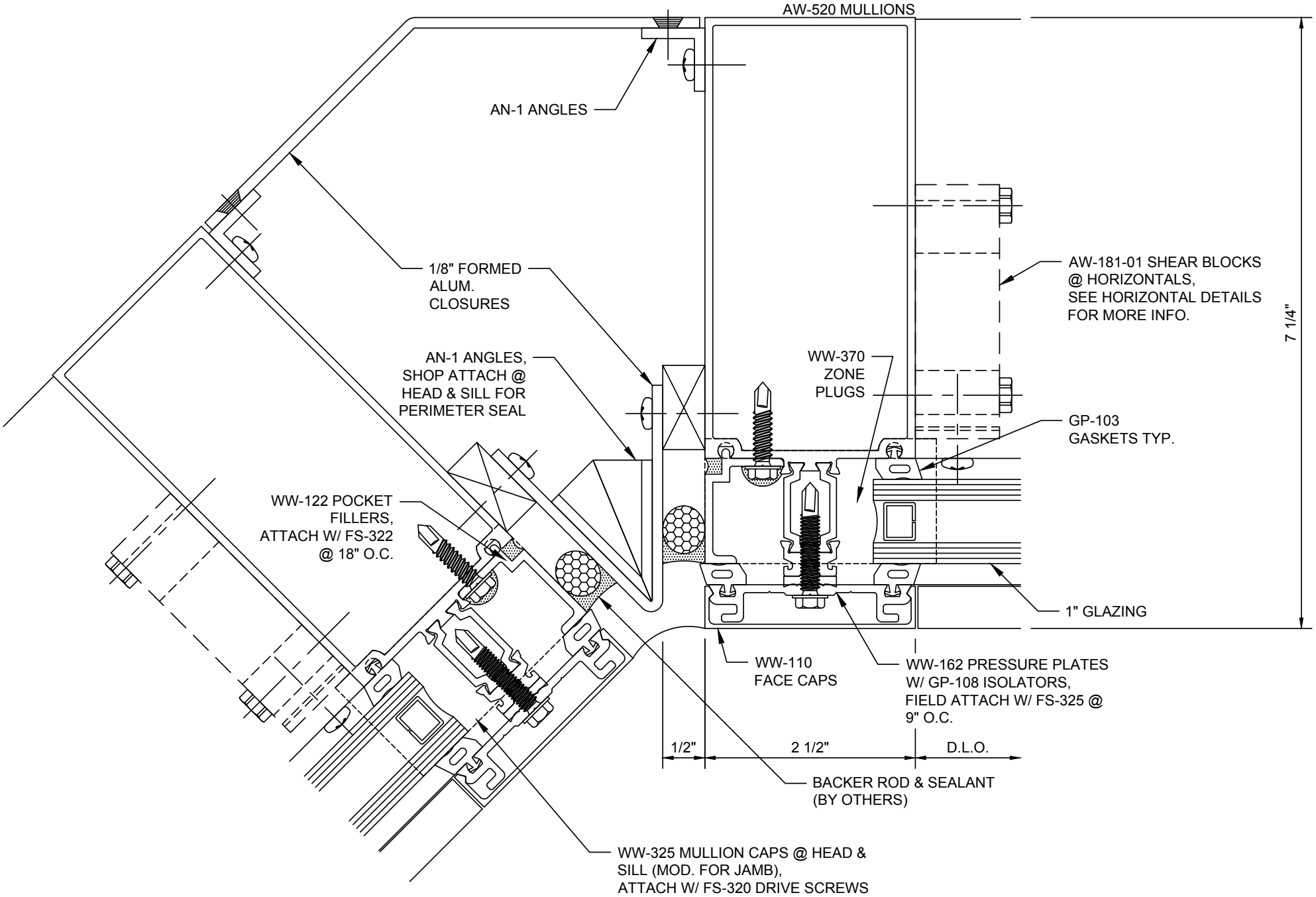

Reliance™-TC Type II
135° Inside Corner - V6427

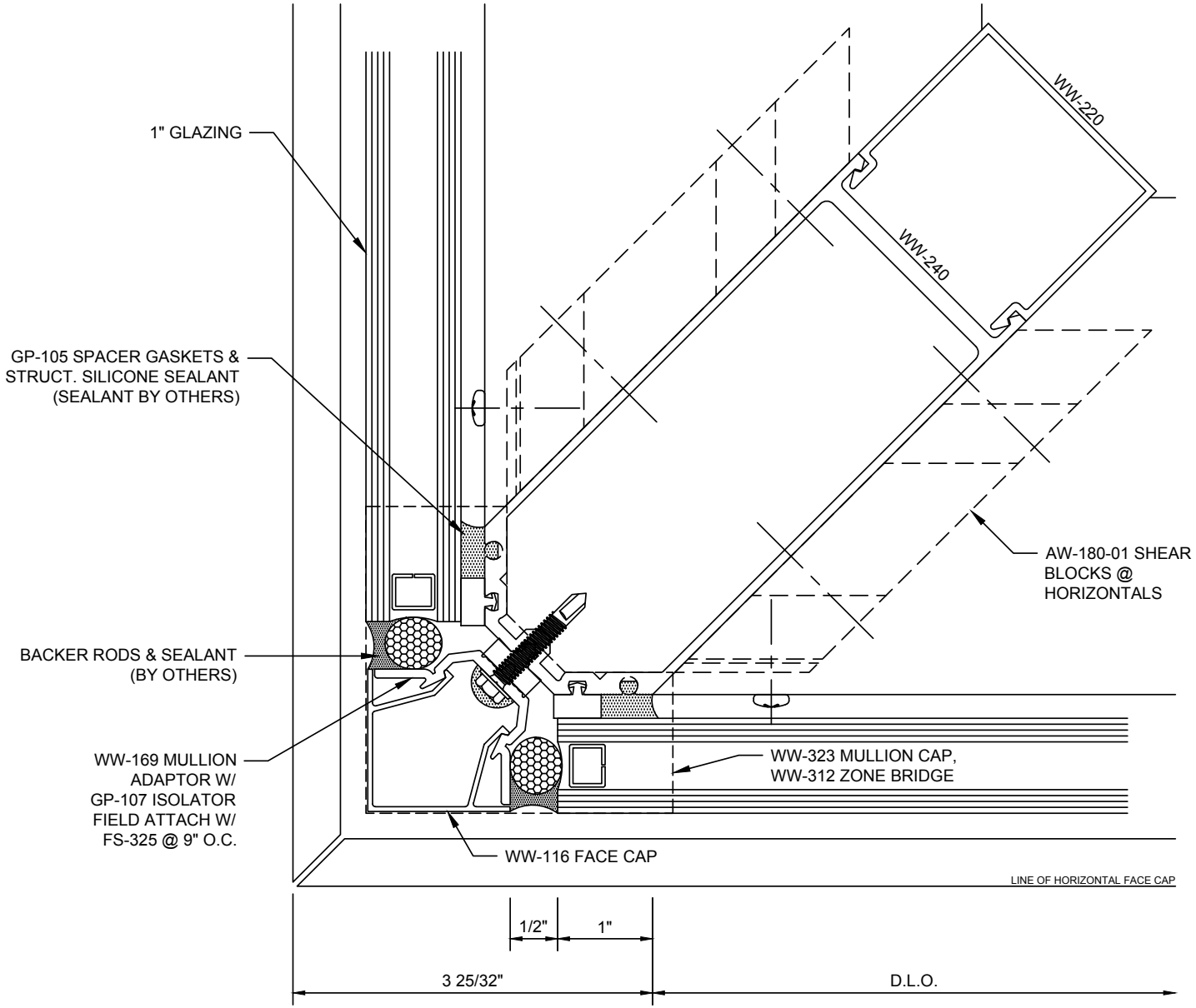

Reliance™-TC Type II
SSG 90° Outside Corner w/ Cap - V6470

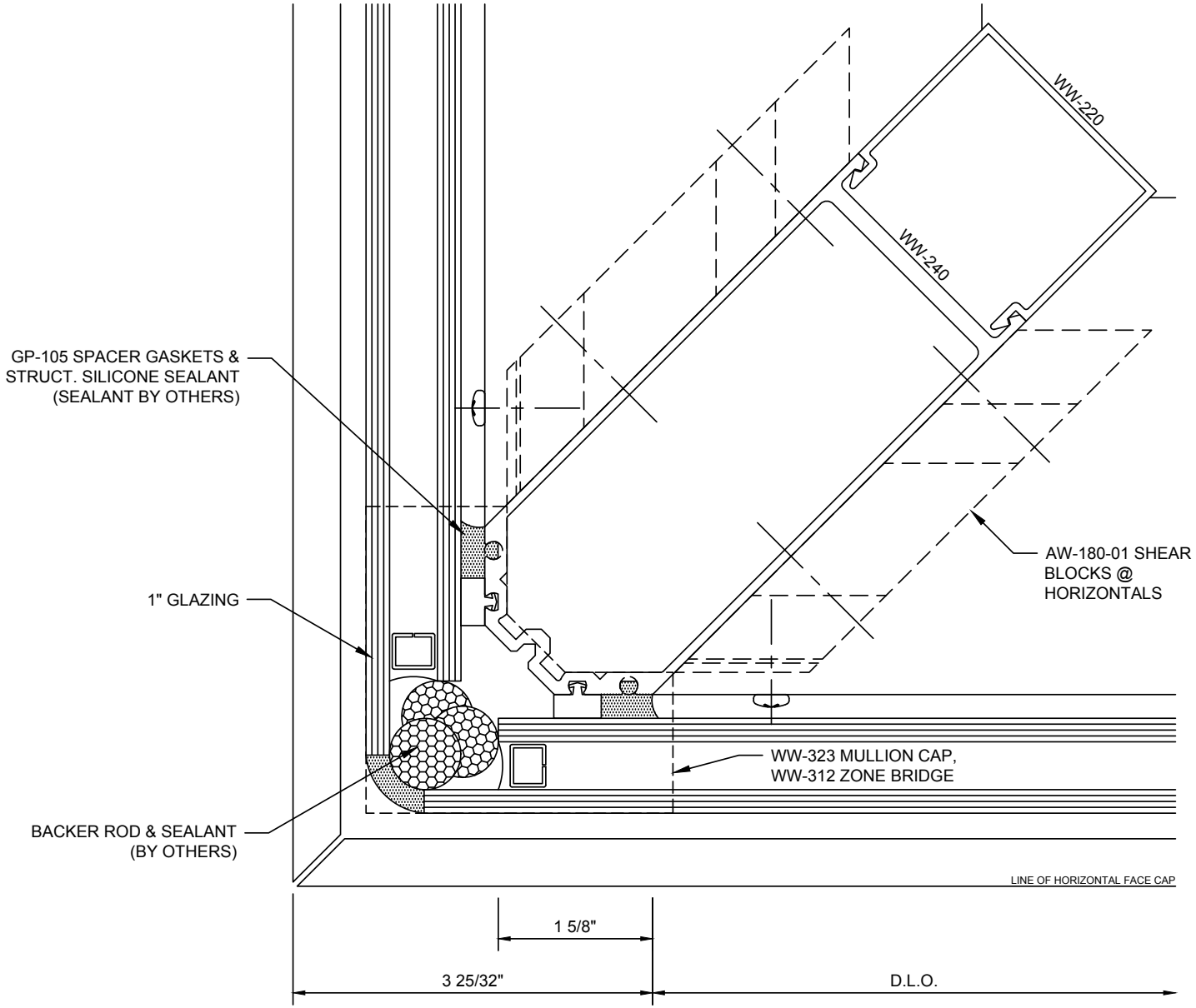

Reliance™-TC Type II
SSG 90° Outside Corner - V6471

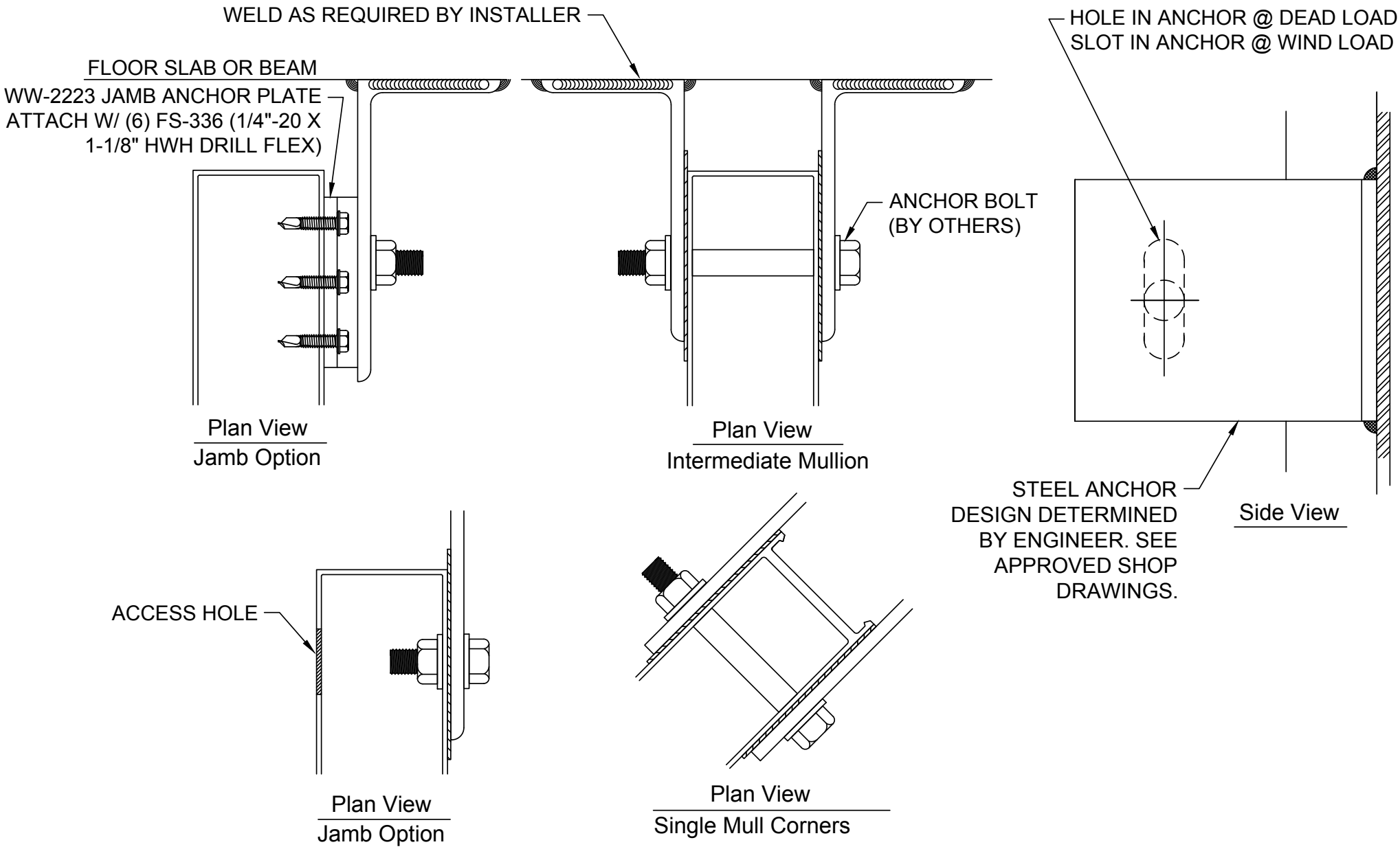

Standard Curtain Wall
Steel Anchor - H0042

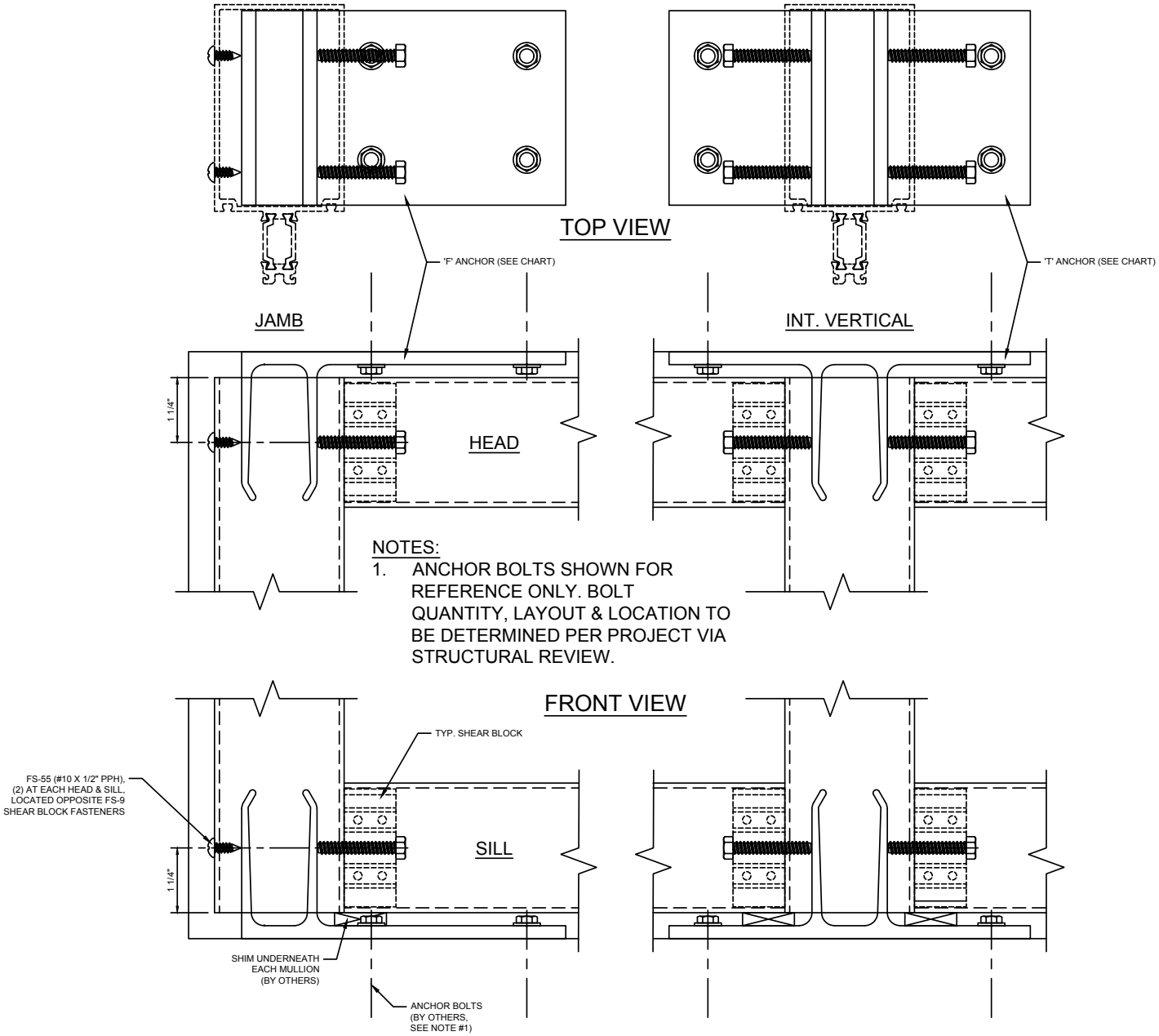

NOTES:

1. ANCHOR BOLTS SHOWN FOR REFERENCE ONLY. BOLT QUANTITY, LAYOUT & LOCATION TO BE DETERMINED PER PROJECT VIA STRUCTURAL REVIEW.

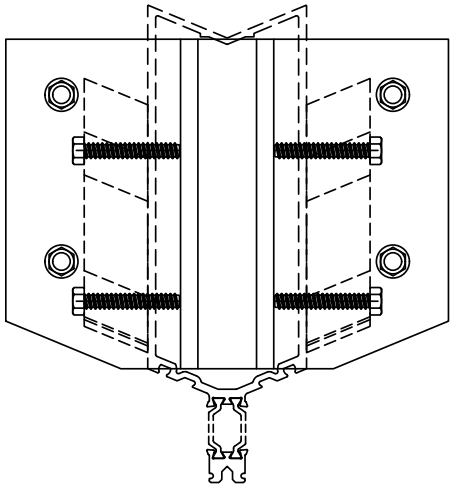

135° CORNER

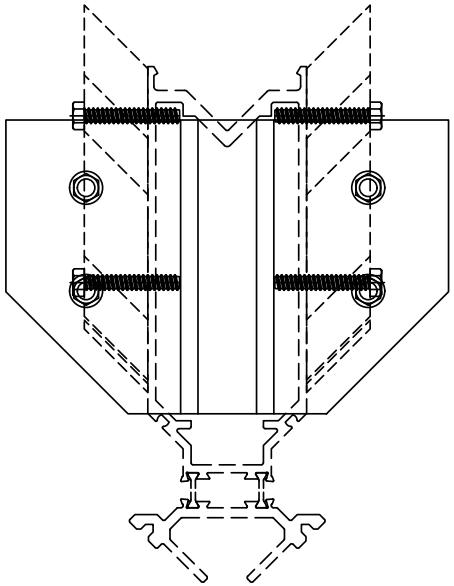

90° CORNER

6" SYSTEM DEPTH		
MULLION	'F' ANCHOR	'T' ANCHOR
AW-420	WW-103-03	WW-102-03
AW-430	WW-103-08	WW-102-11
AW-270	---	WW-102-22
WW-233	---	WW-102-14
WW-404		WW-102-04

Reliance™-TC Type II 'F' & 'T' Anchors - H6425

7-1/4" SYSTEM DEPTH		
MULLION	'F' ANCHOR	'T' ANCHOR
AW-520	WW-103-01	WW-102-01
AW-530	WW-103-07	WW-102-10
AW-270	---	WW-102-22
WW-234	---	WW-102-13
WW-504		WW-102-02

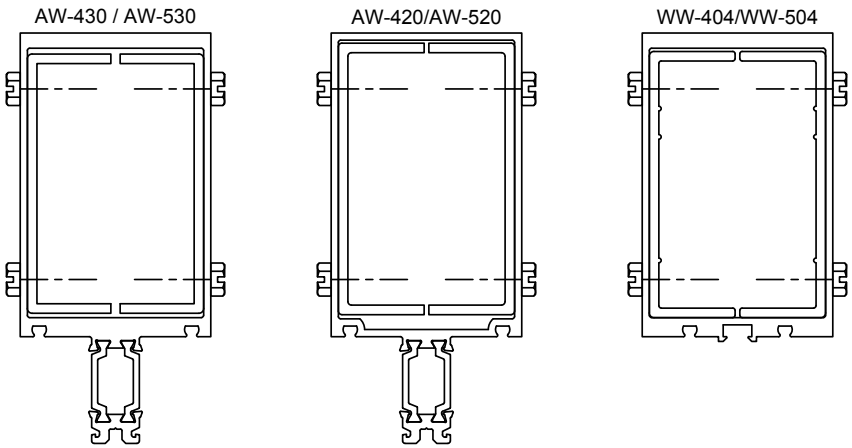

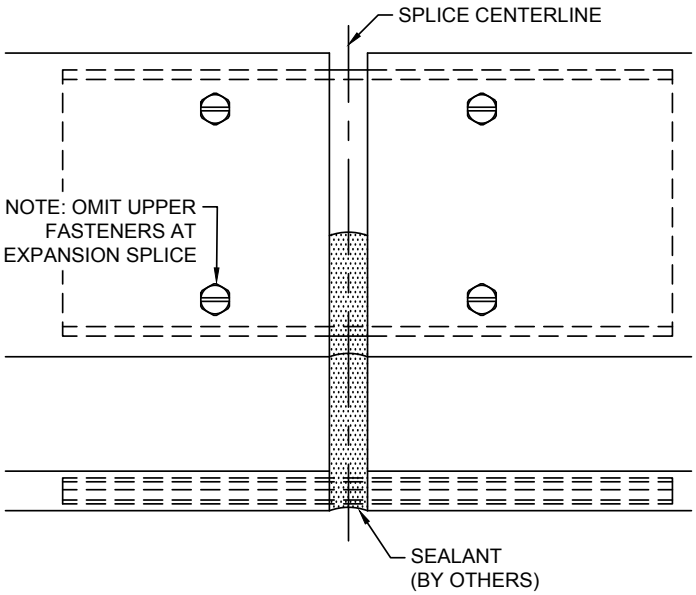

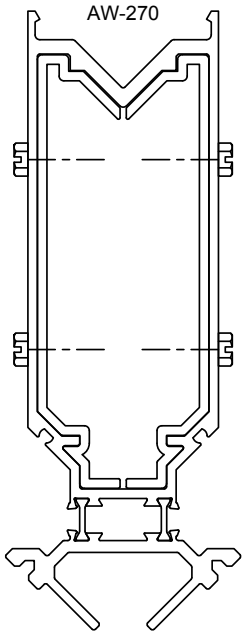

90° OUTSIDE CORNER

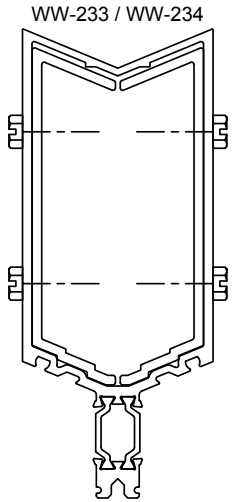

135° OUTSIDE CORNER

6" SYSTEM DEPTH	
MULLION	REAR SPLICE
AW-420	CW-90
AW-430	CW-542
AW-270	AW-129-01
WW-233	WW-213-01
WW-404	WW-192-01

7-1/4" SYSTEM DEPTH	
MULLION	REAR SPLICE
AW-520	CW-66
AW-530	CW-1496
AW-270	AW-129-01
WW-234	WW-214-01
WW-504	CW-74

REFERENCE INSTALLATION MANUAL FOR ADDITIONAL SPLICE INFO.

Reliance™-TC Type II Mullion Splice - H6443

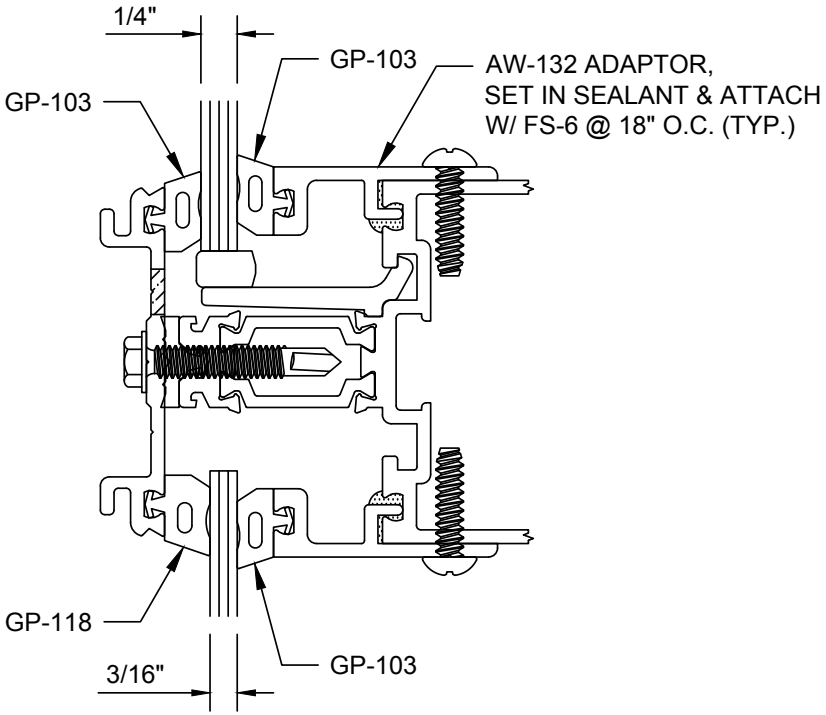

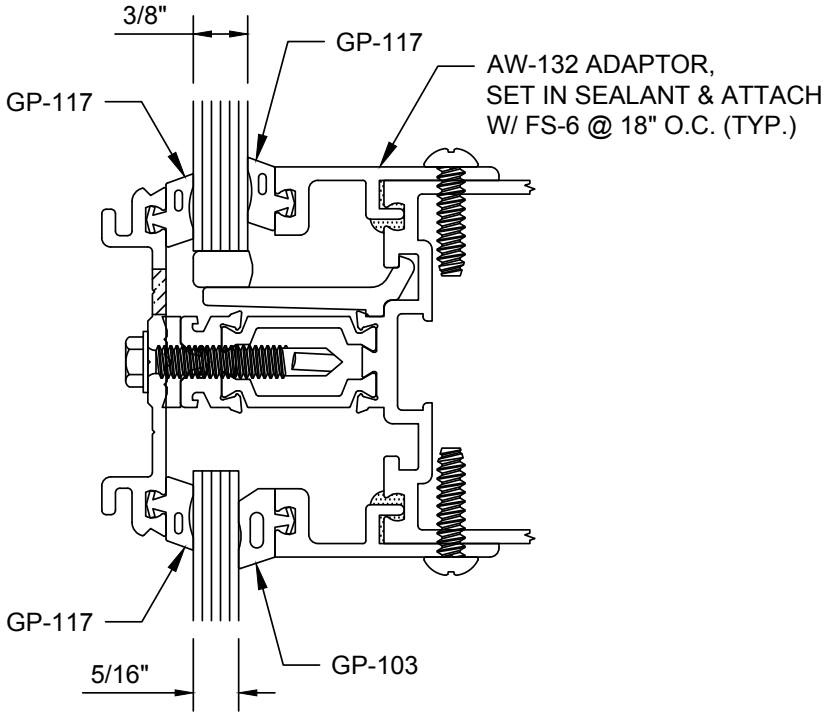

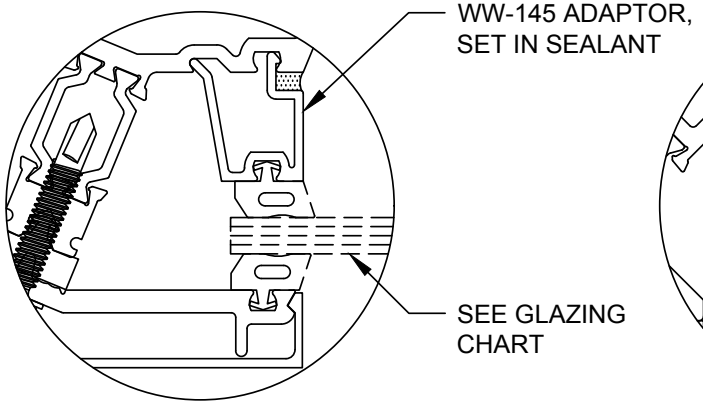

135° CORNER

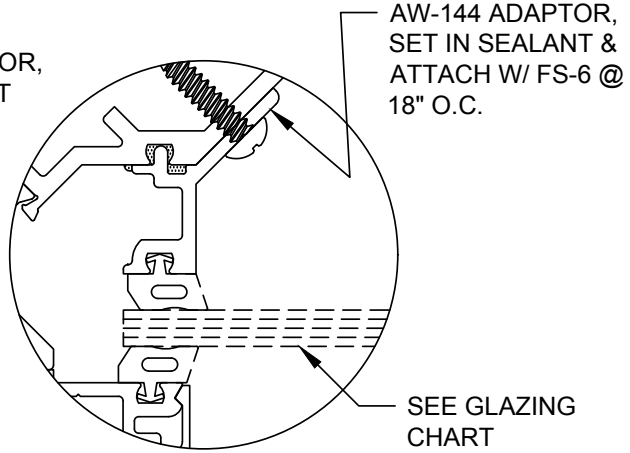

90° CORNER

GLAZING CHART		
INFILL THICKNESS	INTERIOR GASKET	EXTERIOR GASKET
3/16"	GP-103	GP-118
1/4"	GP-103	GP-103
5/16"	GP-103	GP-117
3/8"	GP-117	GP-117

NOTES:
1. HP-17 (MOD.) SETTING BLOCK IS TYPICAL @ SPANDREL GLAZING U.N.O.
2. GLASS POCKET WIDTH WITH ADAPTOR = 3/4"

Reliance™-TC Type II
Spandrel Glazing Options - V6446

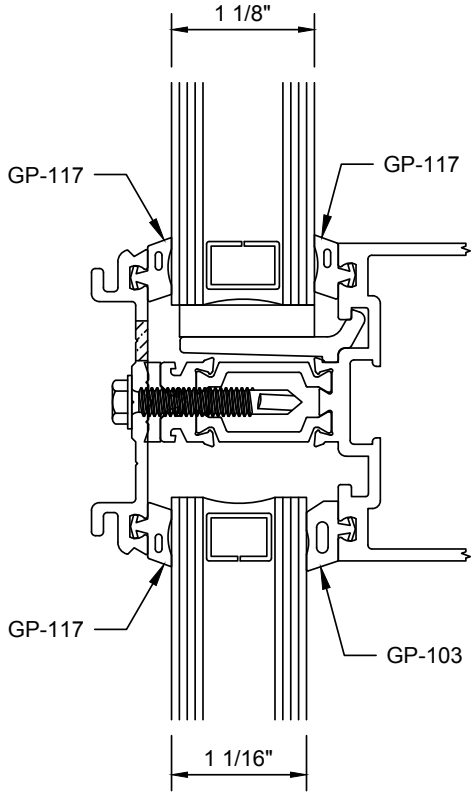

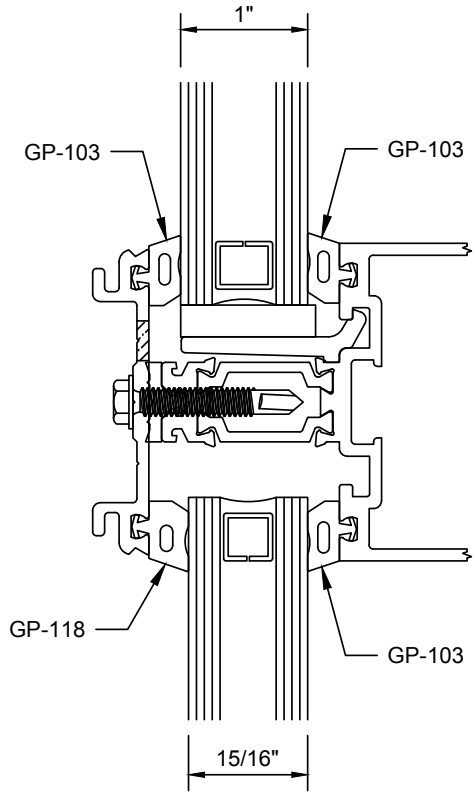

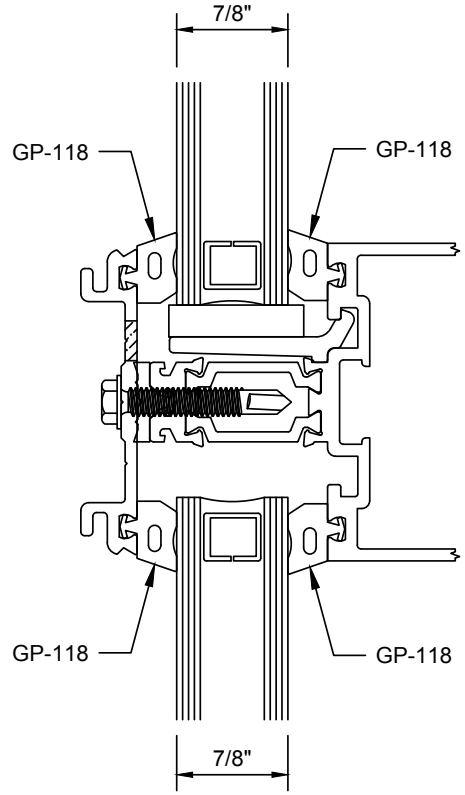

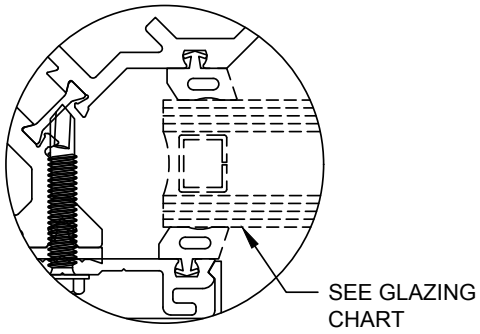

90° OUTSIDE CORNER

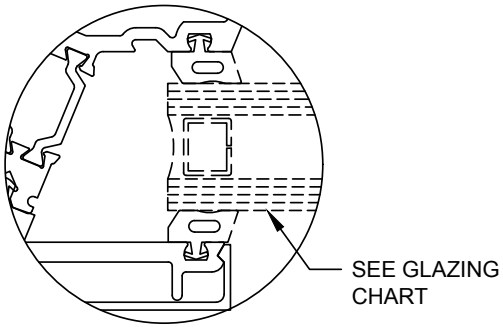

135° OUTSIDE CORNER

GLAZING CHART		
INFILL THICKNESS	INTERIOR GASKET	EXTERIOR GASKET
1-1/8"	GP-117	GP-117
1-1/16"	GP-103	GP-117
1"	GP-103	GP-103
15/16"	GP-103	GP-118
7/8"	GP-118	GP-118

NOTES:
1. GLASS POCKET WIDTH = 1-1/2"
2. GP-116 SETTING BLOCK IS TYPICAL

Reliance™-TC Type II
Vision Glazing Options - H6448